
Peterbilt
CUSTOMERS DRIVE US


CHASE WOLF
Medium Duty
Marketing Segment Manager
Peterbilt


Peterbilt
Ohio Peterbilt
Reefer Peterbilt
Peterbilt
Thank You!

PETERBILT OPERATIONS

Denton





PETERBILT OPERATIONS

Denton



Chassis AGV





Engine AGV



Cab AGV





Frame AGV

FLEXIBLE FACTORY STRATEGY

Denton



Heavy Duty, Medium Duty, Model 520



St. Therese



Heavy Duty & Medium Duty



Produce for Local Markets at Local Factories

MEDIUM DUTY LINE UP



MODEL
535



MODEL
536



MODEL
537



MODEL
548


64
Peterbilt
FM
102.9Hz
AUTO

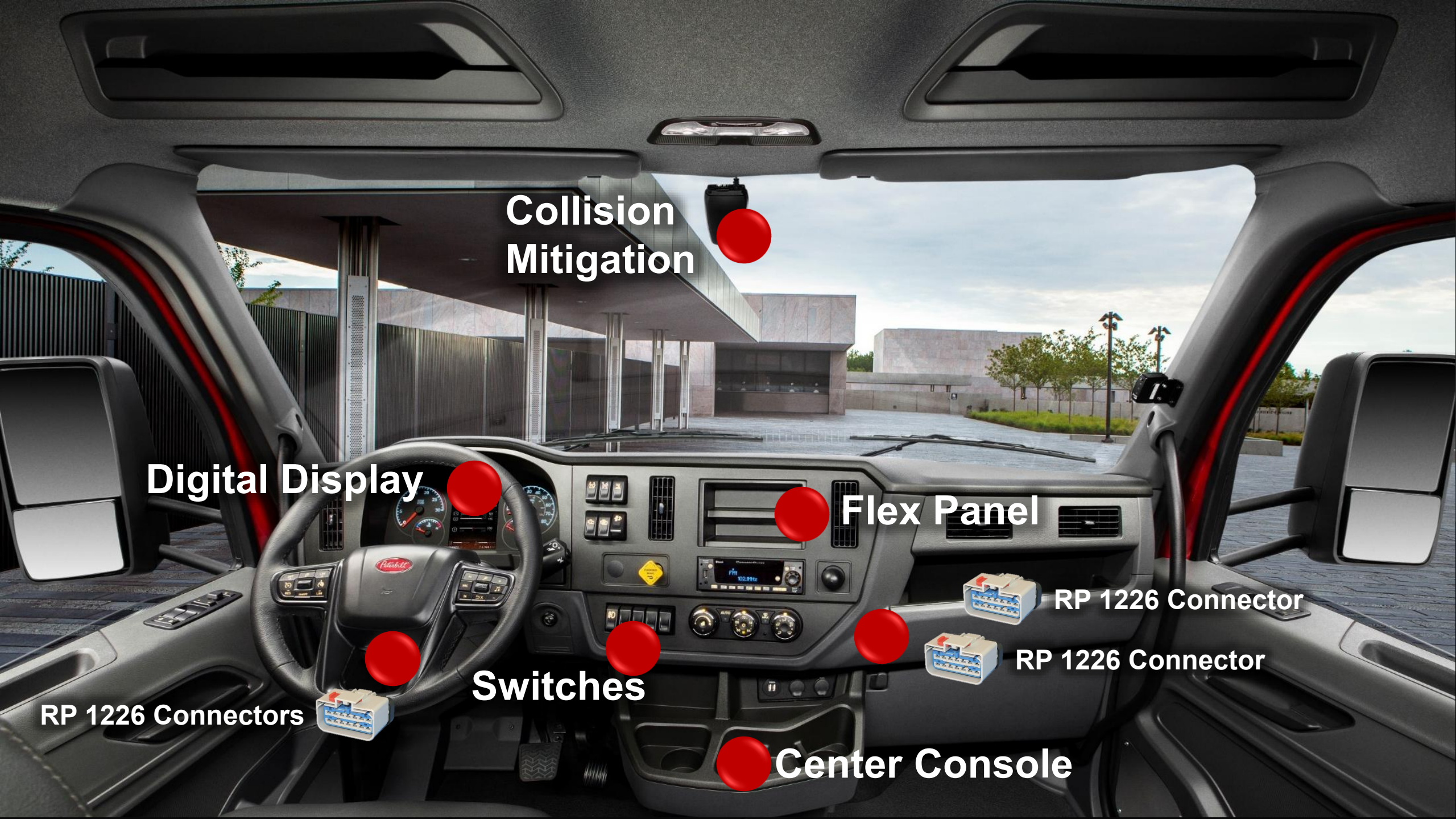
Collision Mitigation
Digital Display
Flex Panel
RP 1226 Connector
RP 1226 Connector
Switches
RP 1226 Connectors
Center Console


PETERBILT
POWERTRAINS
Peterbilt

MEDIUM DUTY POWERTRAIN OFFERINGS 2027

	 MODEL 535	 MODEL 536	 MODEL 537	 MODEL 548
PX-7 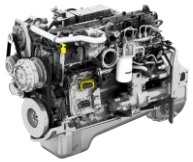				
PX-9 				
B6.7O 				
L9N 				

MEDIUM DUTY POWERTRAIN OFFERINGS 2027

	 MODEL 535	 MODEL 536	 MODEL 537	 MODEL 548
PX-7 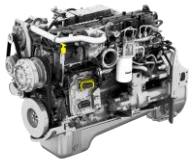	EPA24			
PX-9 				
B6.7O 				
L9N 				

MEDIUM DUTY POWERTRAIN OFFERINGS 2027

	 MODEL 535	 MODEL 536	 MODEL 537	 MODEL 548
PX-7 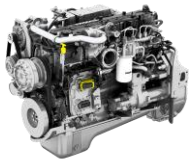	EPA24			
PX-9 		EPA24 → Q1 & Q2 EPA27 → Q3 & Q4		
B6.7O 				
L9N 				

MEDIUM DUTY POWERTRAIN OFFERINGS 2027

	 MODEL 535	 MODEL 536	 MODEL 537	 MODEL 548
PX-7 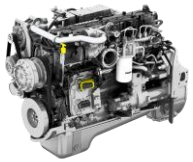	EPA24			
PX-9 		EPA24 → Q1 & Q2 EPA27 → Q3 & Q4		
B6.7O 		AS-IS		
L9N 		AS-IS		

MEDIUM DUTY POWERTRAIN OFFERINGS 2027

	TX-8	TX-12 / PRO	EATON	Allison
				
PX-7 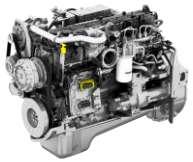	Auto		FS	1000 - 3000
PX-9 				
B6.7O 				
L9N 				

MEDIUM DUTY POWERTRAIN OFFERINGS 2027

	TX-8	TX-12 / PRO	EATON	Allison
				
PX-7 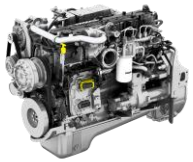	Auto		FS	1000 - 3000
PX-9 	Auto/AMT	Auto/AMT	FR/FS/RT Ultrashift	3000, 4000, 4500
B6.7O 				
L9N 				

MEDIUM DUTY POWERTRAIN OFFERINGS 2027

	TX-8	TX-12 / PRO	EATON	Allison
				
PX-7 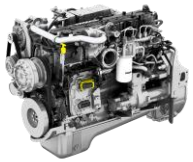	Auto		FS	1000 - 3000
PX-9 	Auto/AMT	Auto/AMT	FR/FS/RT Ultrashift	3000, 4000, 4500
B6.7O 	Auto			
L9N 				3000, 4000, 4500

MEDIUM DUTY POWERTRAIN OFFERINGS 2027

	TX-8		EATON		Allison	
	Chelsea	Muncie	Chelsea	Muncie	Chelsea	Muncie
PX-7						
PX-9						
B6.7O						










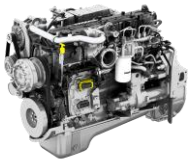



MODEL 548 FEPTO HOOD

- 109″ BBC FEPTO Hood
- 3-Piece Metton Hood
- 20K Front Axle
- Optional Full-Through Rails



ELECTRONIC PARK BRAKE

- Available on Class 6 – 8 Medium Duty
- Easier Driver Operation
- Rollaway Mitigation
- Smart Un-Park with Door Sensors




Peterbilt
CUSTOMERS DRIVE US



Christian Elliott

Medium Duty Sales Manager

SALES ENGINEERING

- Embedded Engineers in the Sales Team:
  - Engineering Support To Customers, Dealers, and Body Builders
  - Spec'ing Assistance
  - Liaisons Between Sales and Engineering
  - SME for Specific Product Line
  - Custom Solutions





VEHICLE LAYOUT

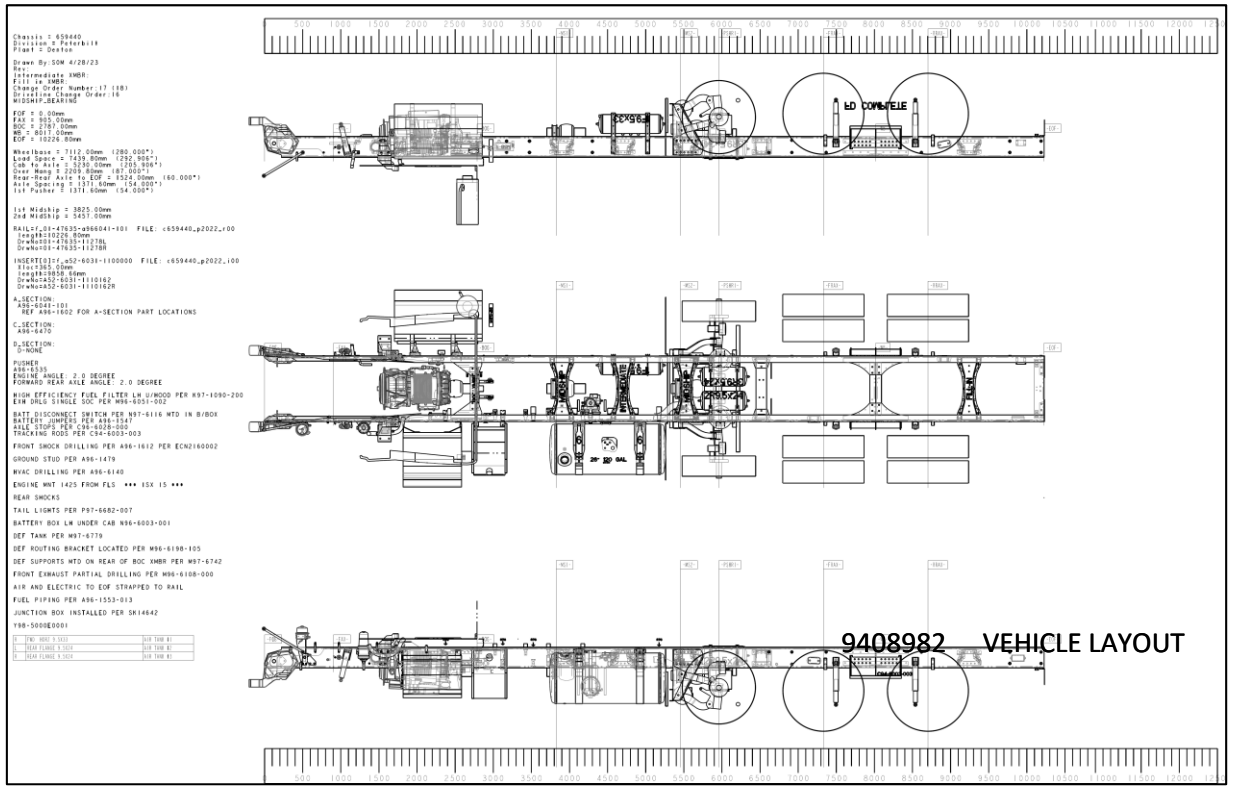

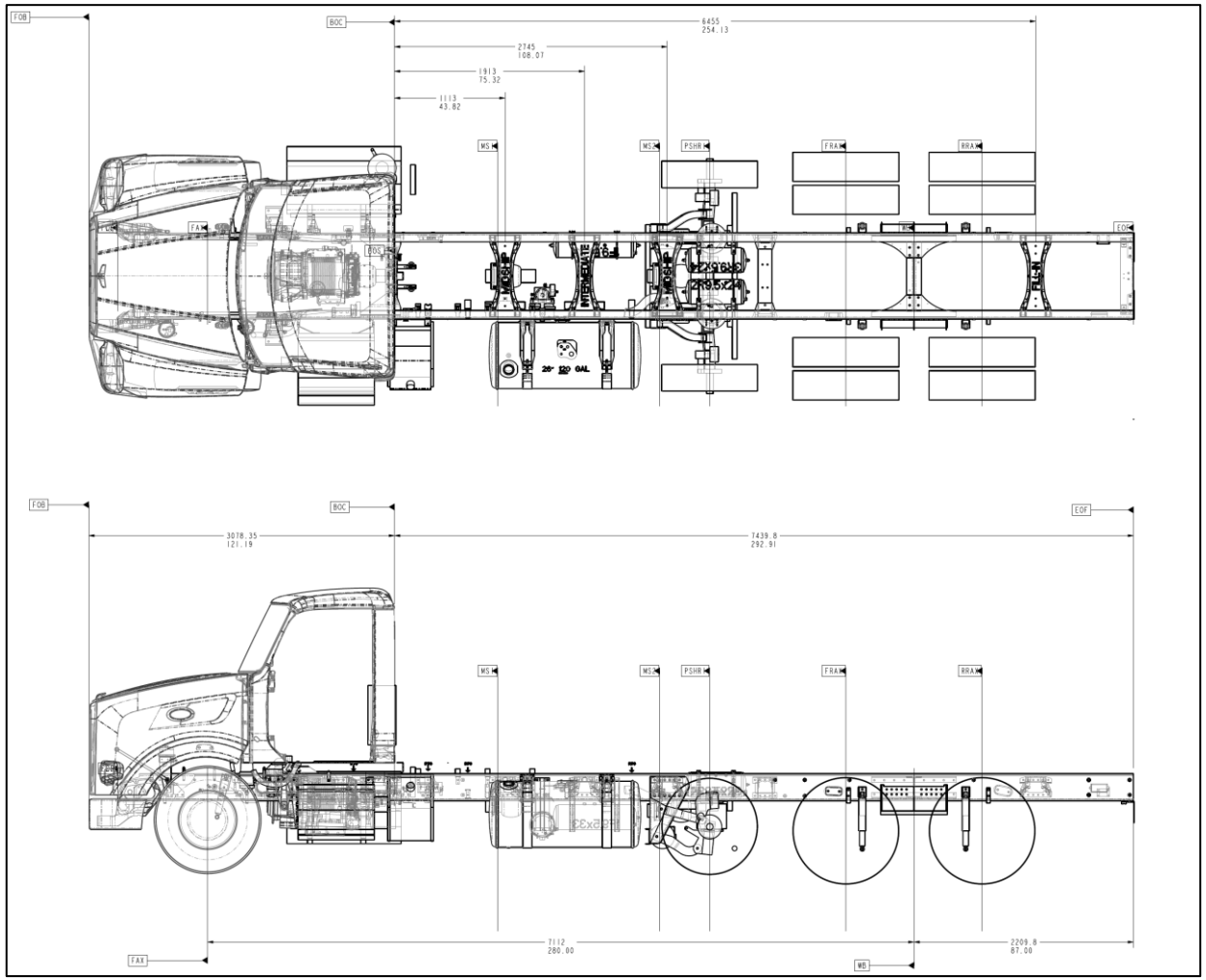

- 2D and 3D Models Available
- 4-day Approval Process
- Sale Code - 9408982 (VEHICLE LAYOUT)

PETERBILT TERMINOLOGY

CA	Cab to axle. Measured from the back of the cab to the centerline of the rear axle(s).
EOF	Frame rail overhang behind rear axle--measured from the centerline of tandems
FOF	Front of frame
FAX	Front Axle
BOC	Back of cab
SOC	Side of cab
WB	Wheelbase
BFA	Bumper to front axle. Measured from front of bumper centerline of front axle.
BBC	Bumper to back of cab Measured from front of bumper to back of cab.

PETERBILT TERMINOLOGY

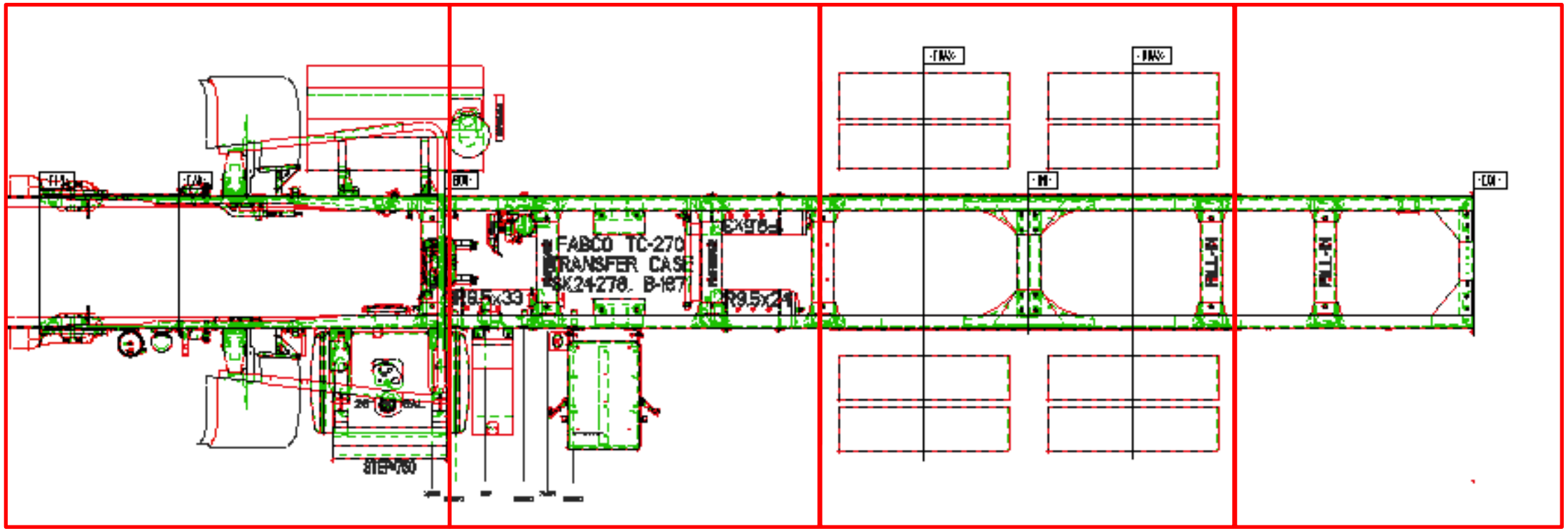

A Section	B Section	C Section	D Section
Front of Frame to Back of cab	Back of cab to Rear Suspension	Rear Suspension	Rear Suspension to End of Frame

BODY MOUNTING – CLEARANCES

Body To Rear Tire

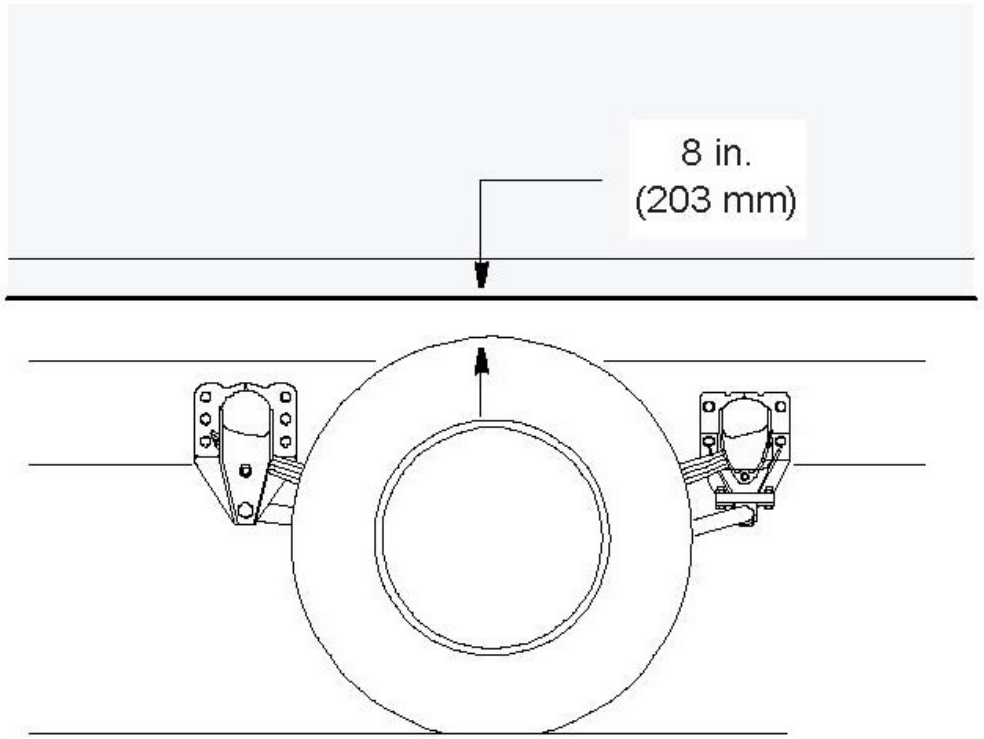

Peterbilt recommends a min. clearance of **8”** from the top of the rear tire to the body.

Body To Cab

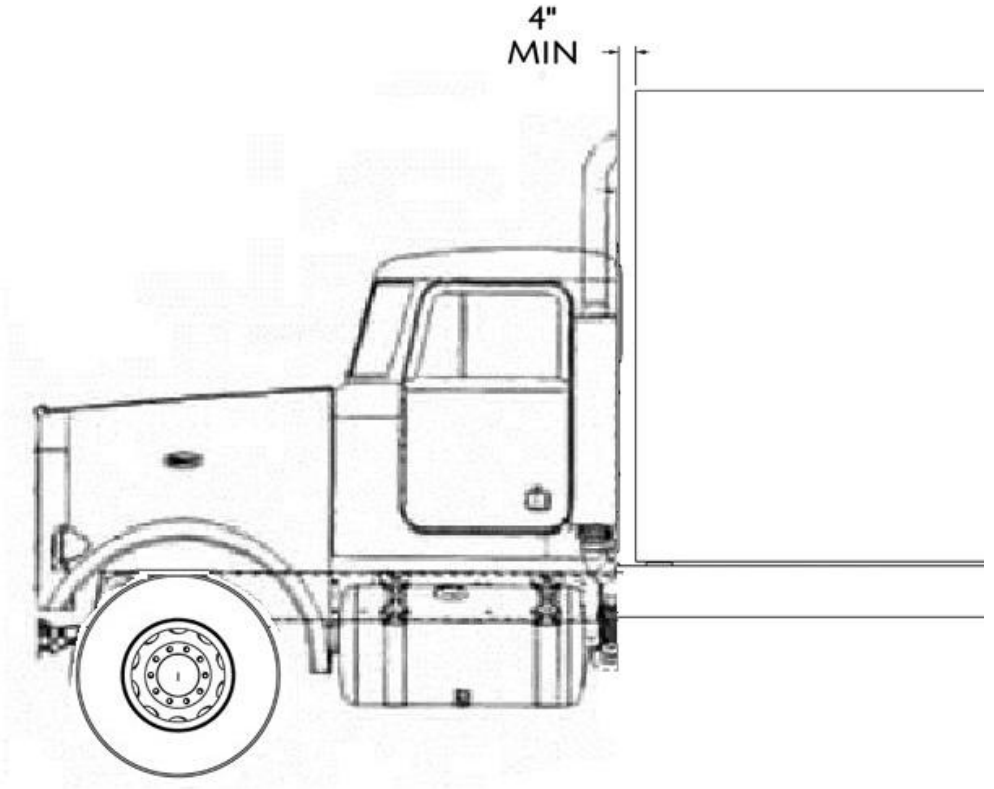

Peterbilt recommends a min. clearance of **4”** from the front of the body to the back of cab.

CHASSIS MODIFICATION – DRILLING

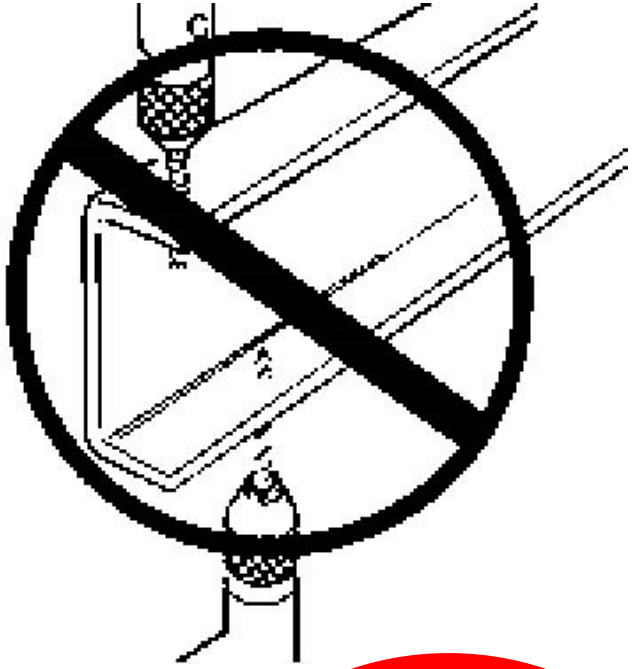



- Do Not Drill Flanges
- All Holes Must Be Filled With Fasteners
- Holes Should Be Placed No Closer Than 2X The Diameter Of The Larger Hole
- Holes Should Be No More Than .06” Larger That Bolt Diameter
- A Torch Is **NOT** An Approved Drill
- Additional Frame Drilling from Factory
  - 10.4 mm to 27 mm Hole Diameter

PETERBILT / PACCAR DRILLING GRID

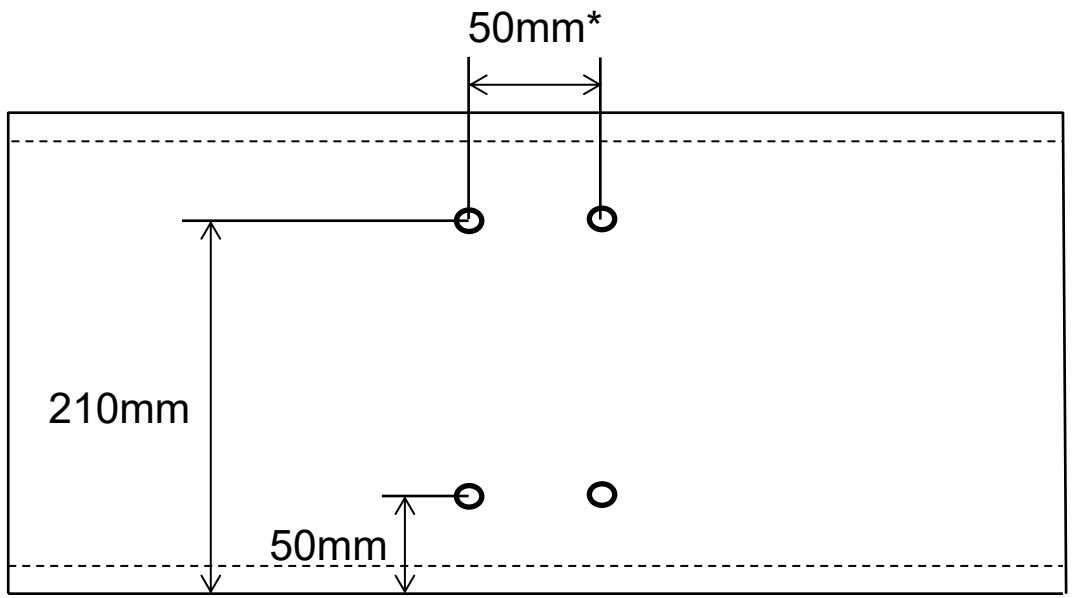

Peterbilt Grid
367/365/389/520

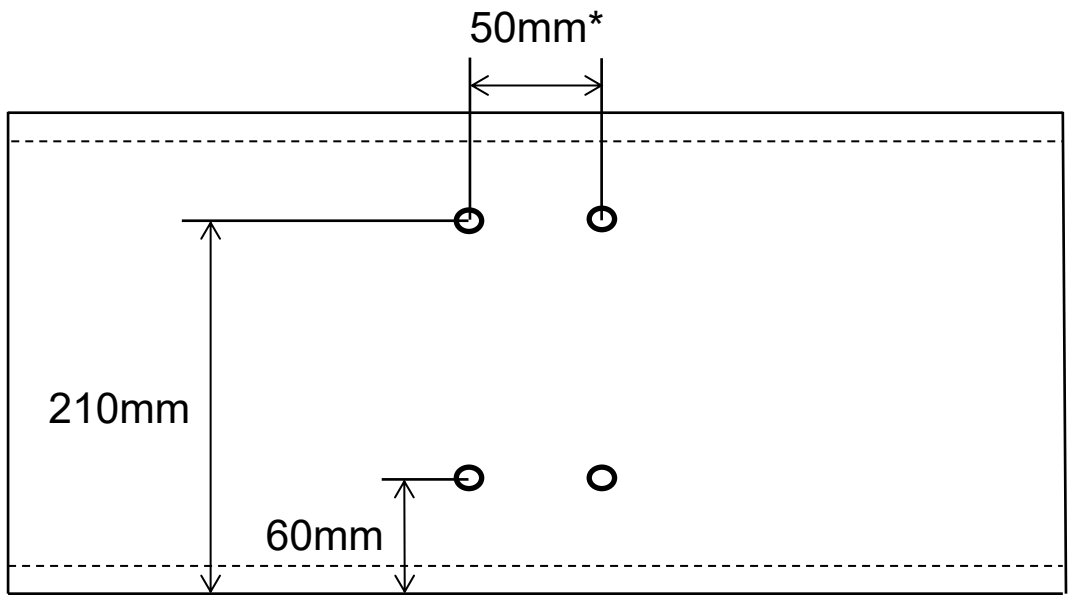

Paccar Grid
567/579/589/MD

* 50mm Is The MIN. Distance From Hole To Hole.

BODY MOUNTING – BRACKETS

Body Subframe
(Rail)

Chassis Frame
(Rail)

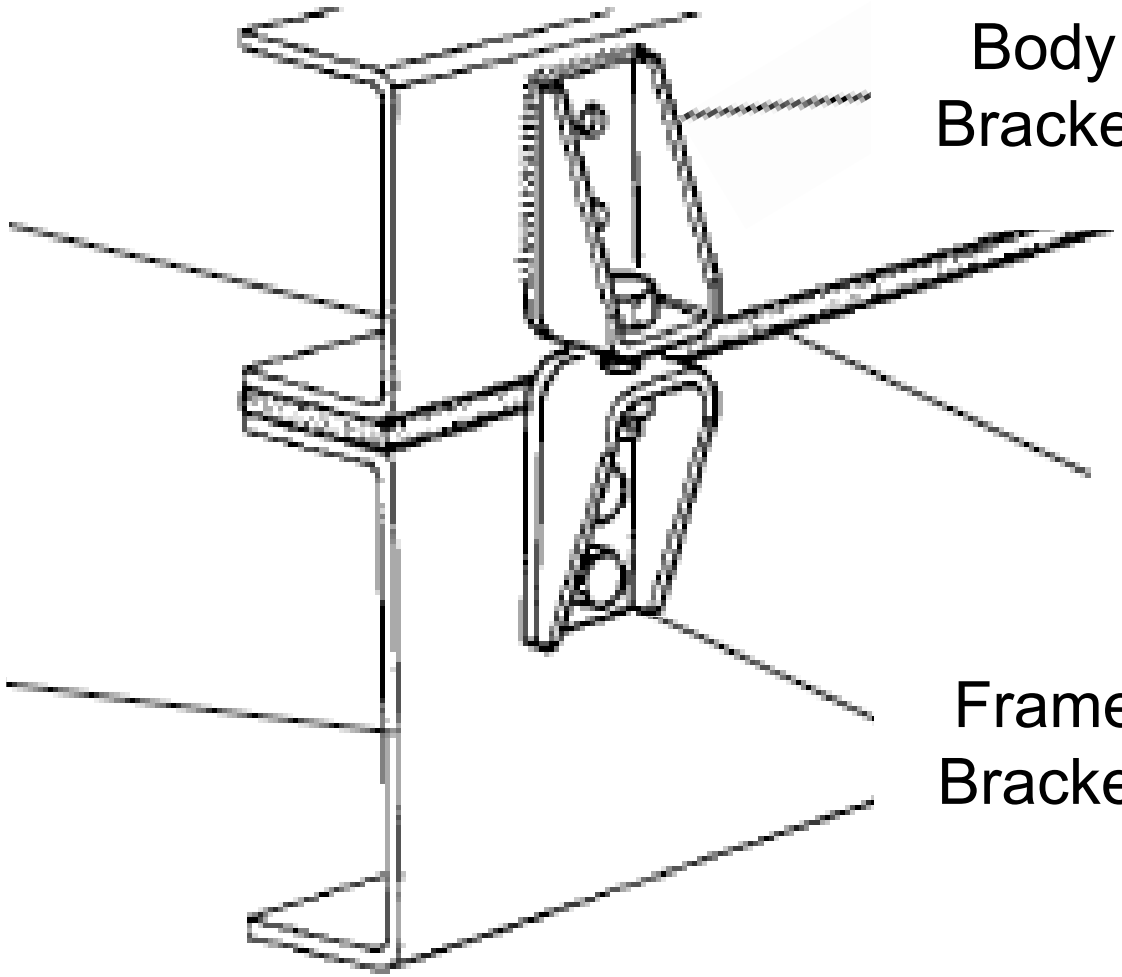

Body
Bracket

Spacer

Frame
Bracket

BODY MOUNTING – BRACKETS FASTENING

Spring Mount

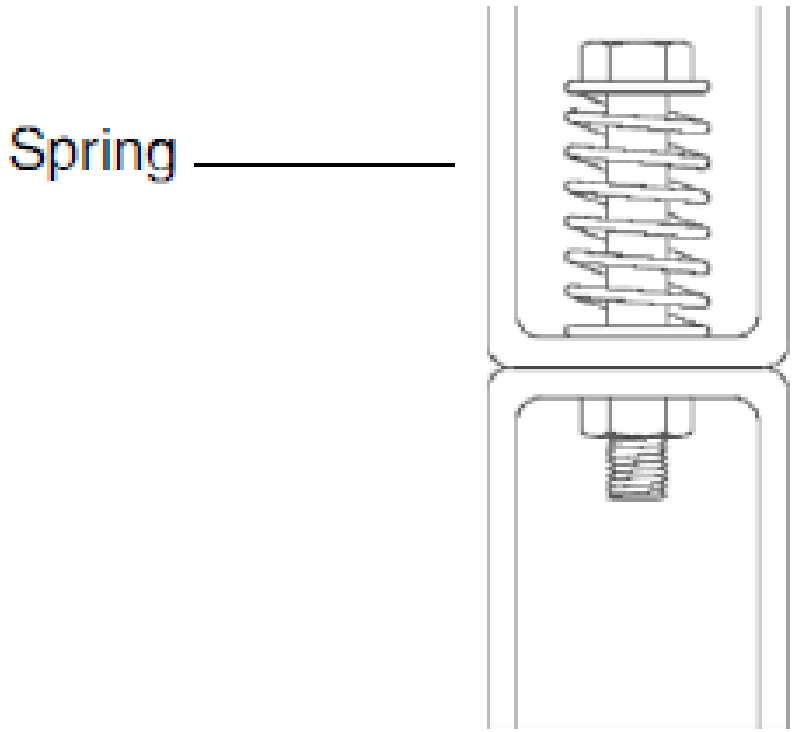

Rubber Mount

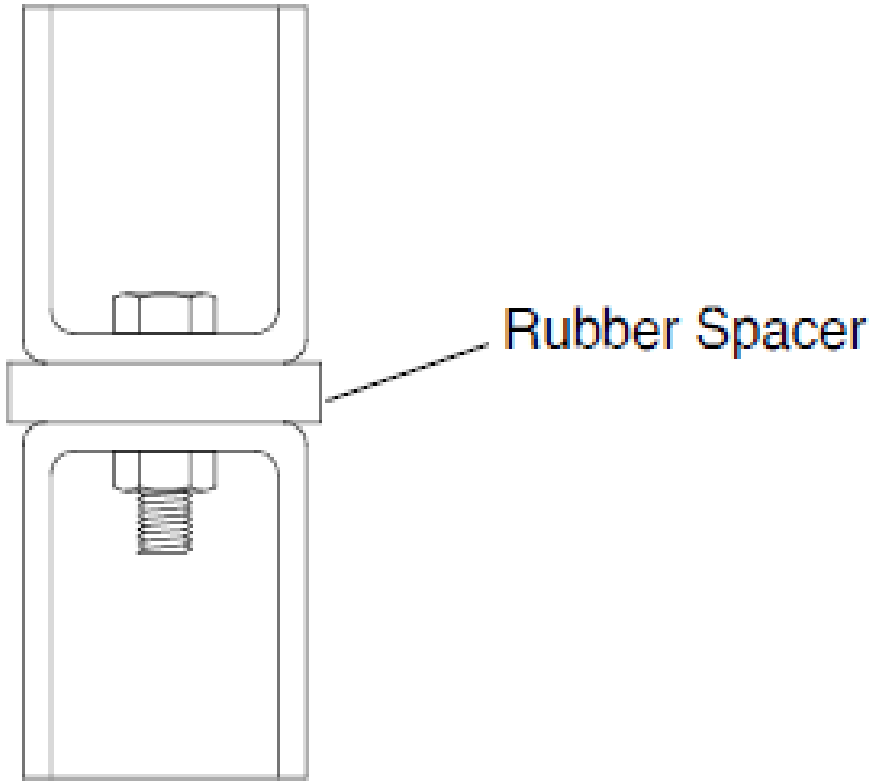

Purpose - Allow relative movement between the body and the chassis during extreme frame racking situations.

BODY MOUNTING – U-BOLTS

Body Structure

Wood Sill 0.5” Minimum (12 mm)

Truck Frame

Frame Rail Spacer (Fabricated Steel or Hardwood)

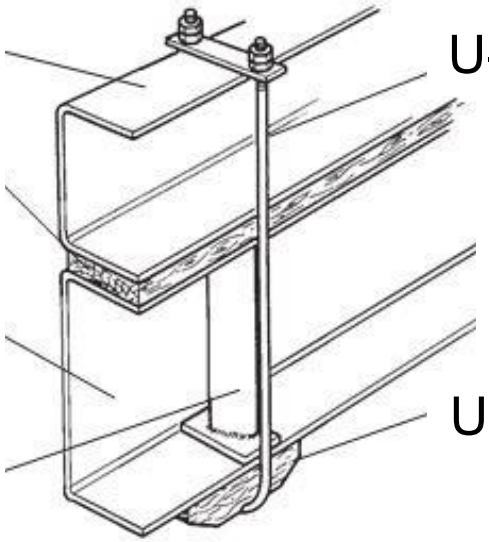

U-Bolt

U-Bolt Spacer (Hardwood)

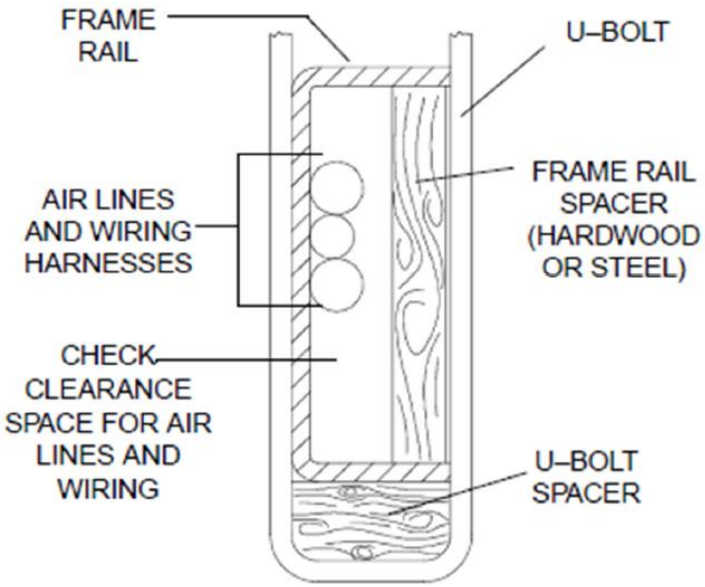

Purpose – protect chassis routing and avoid frame rail deformation.

Warning - *Do not notch frame rail flanges to force a U–bolt fit*

BODY MOUNTING – REAR BODY MOUNTS

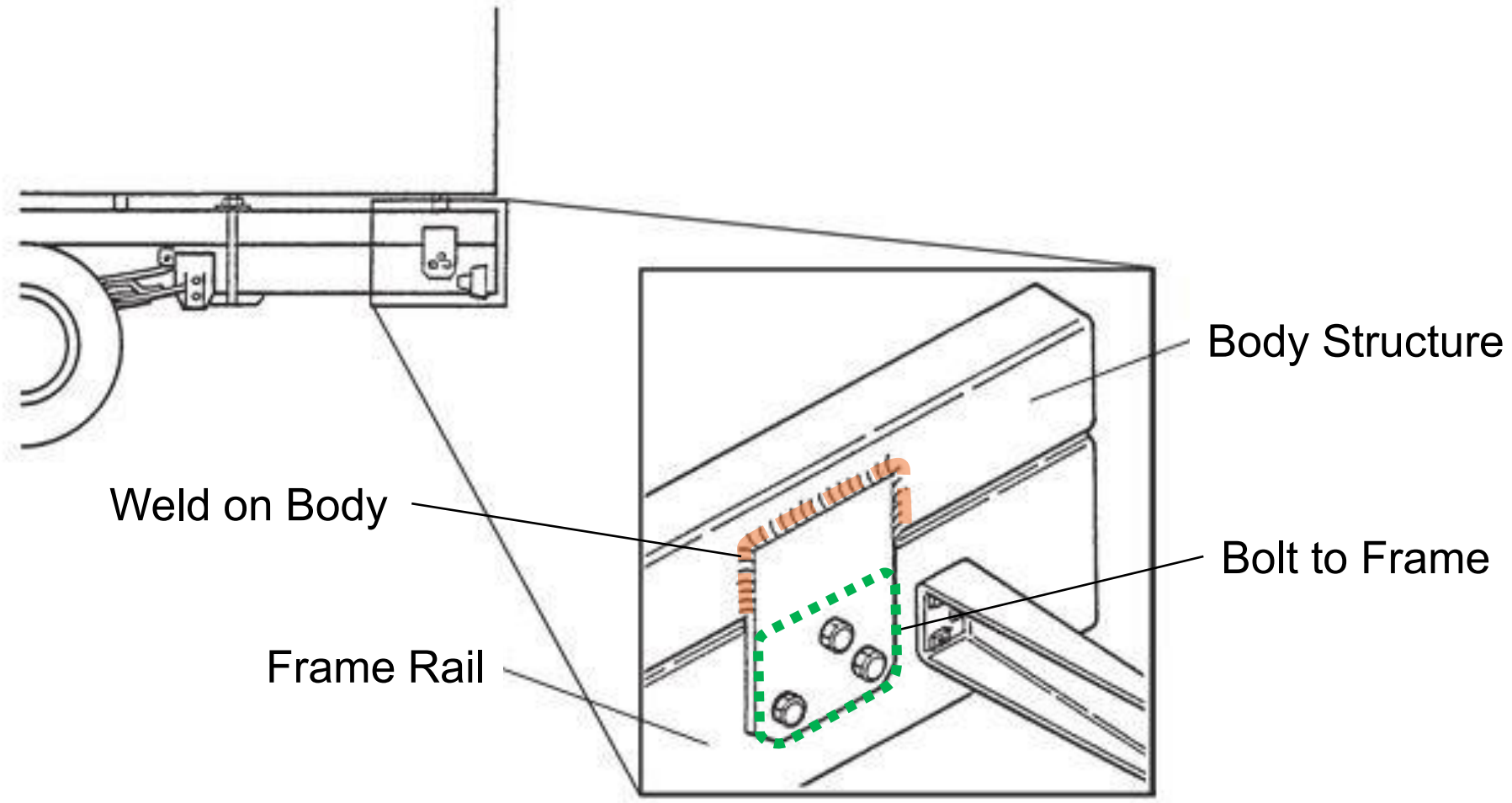

Warning - *Do not weld to chassis frame rail. The high heat of welding nullifies the special heat treatment of the rails, greatly reducing tensile strength.*

CHASSIS MODIFICATION – WHEELBASE

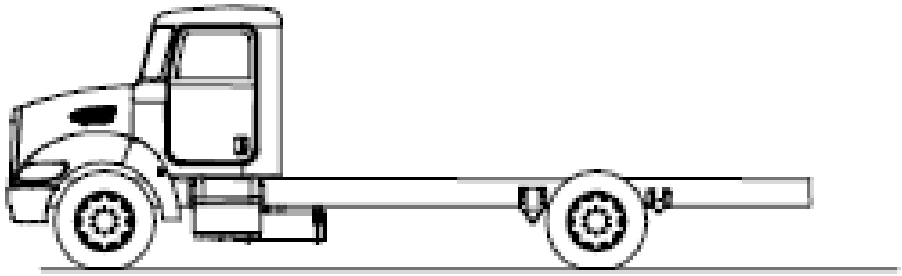

ORIGINAL WHEELBASE

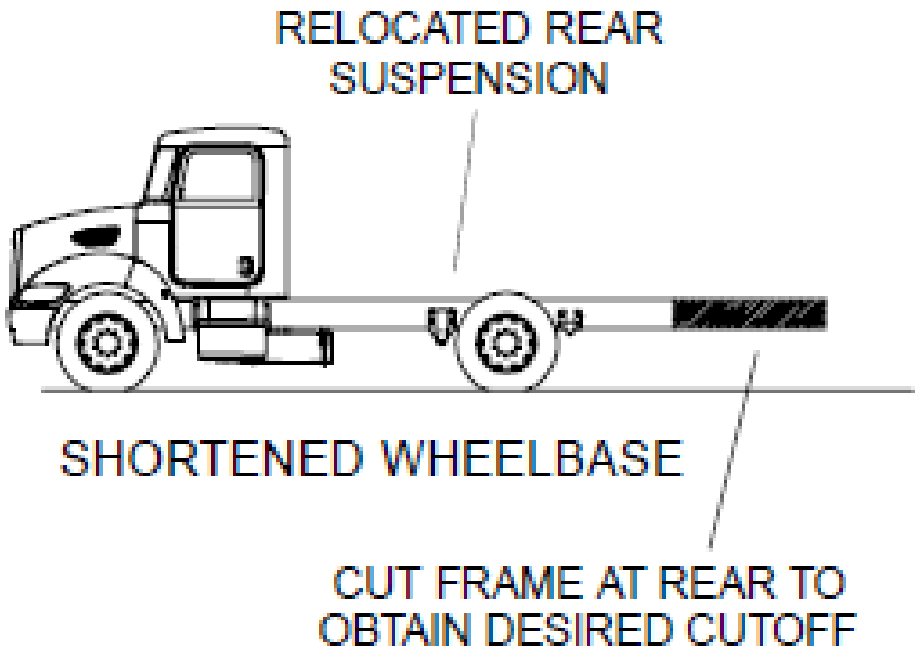

- Follow Driveline Manufacturer's Guidelines
- Check For Frame Interferences
- Fasteners To Be Torqued Per PB Guidelines
- Drilling To Follow PB Guidelines
- Add Or Remove Crossmembers As Needed
- 47.2" (1200mm) Max Spacing

CHASSIS MODIFICATION – CROSSMEMBERS

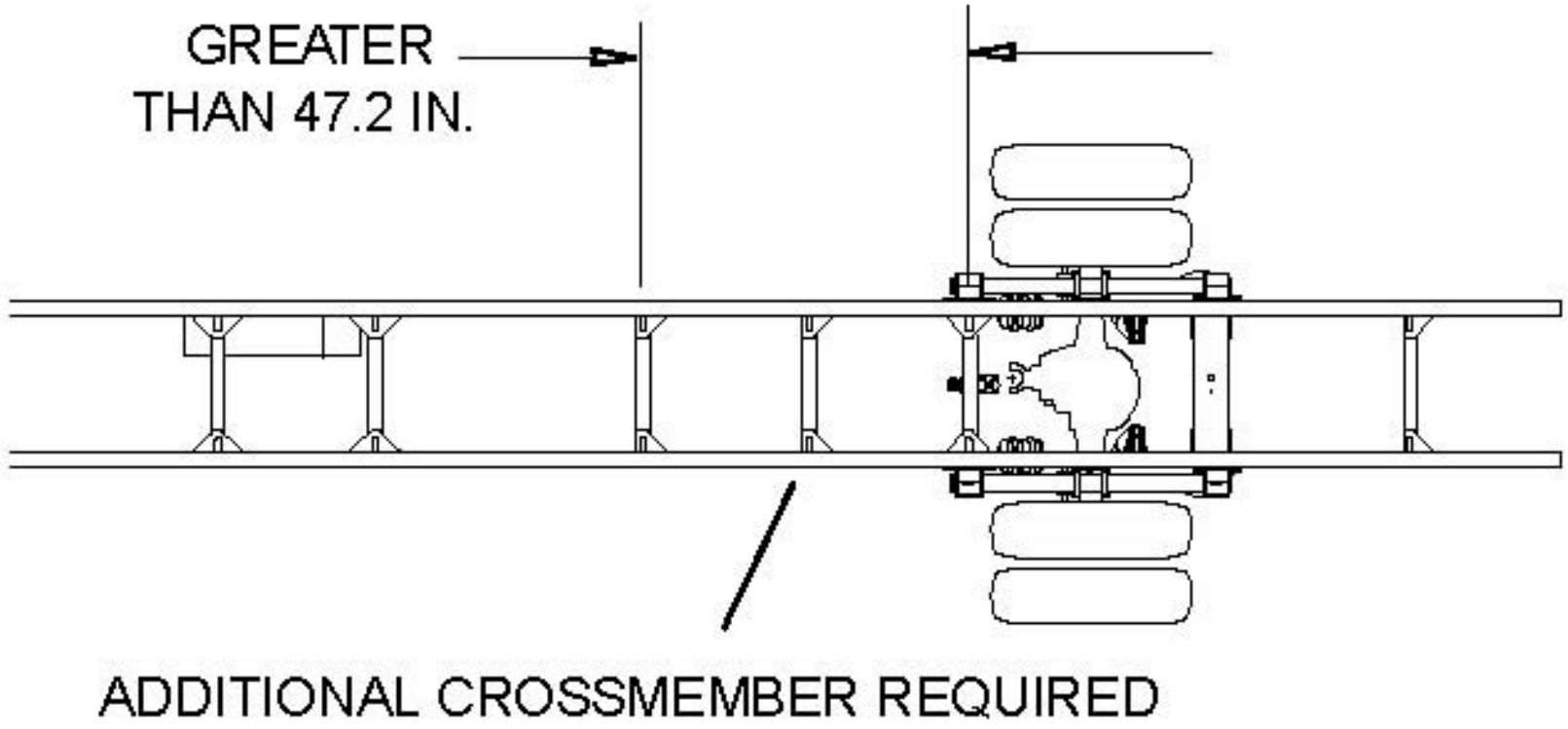

In the event crossmembers are more that 47.2 (1200mm) apart an additional crossmember must be installed.

CHASSIS MODIFICATION – OVERHANG

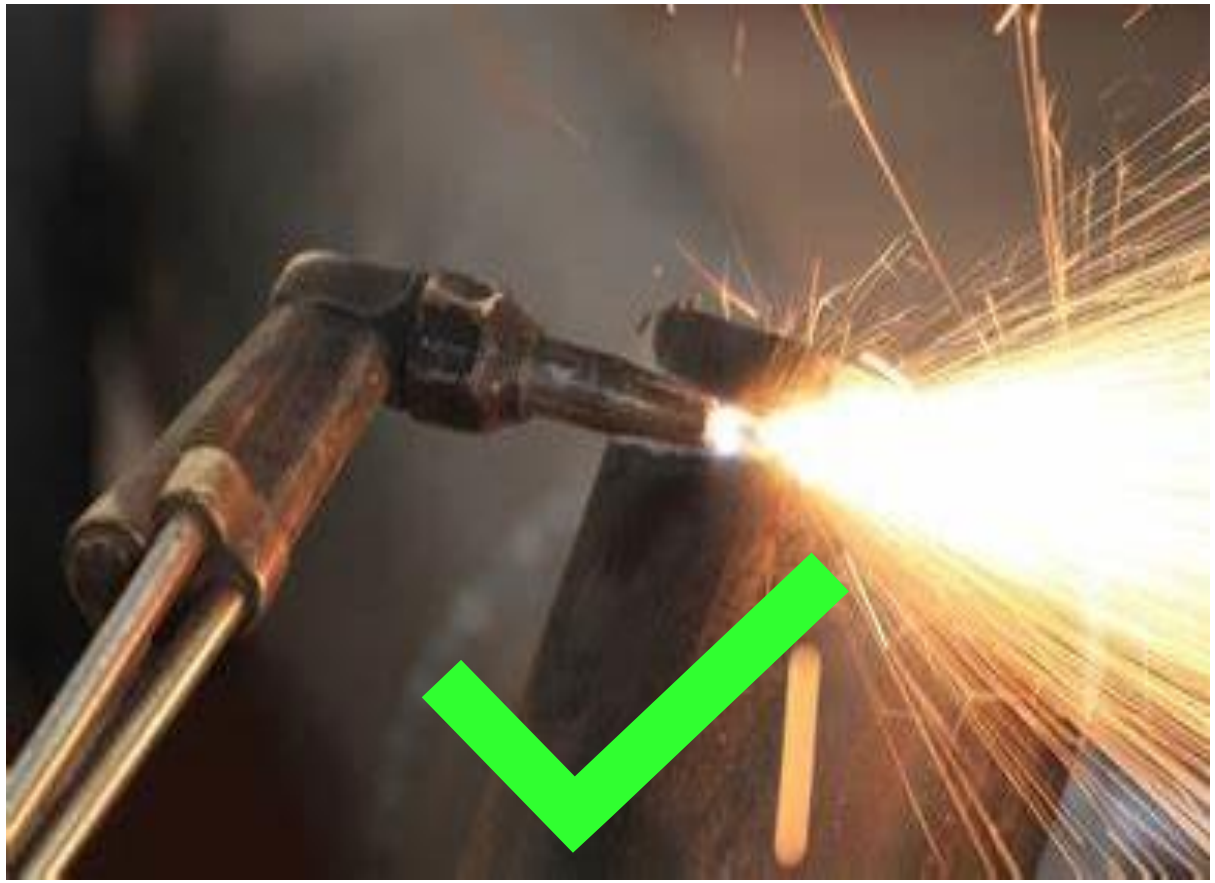

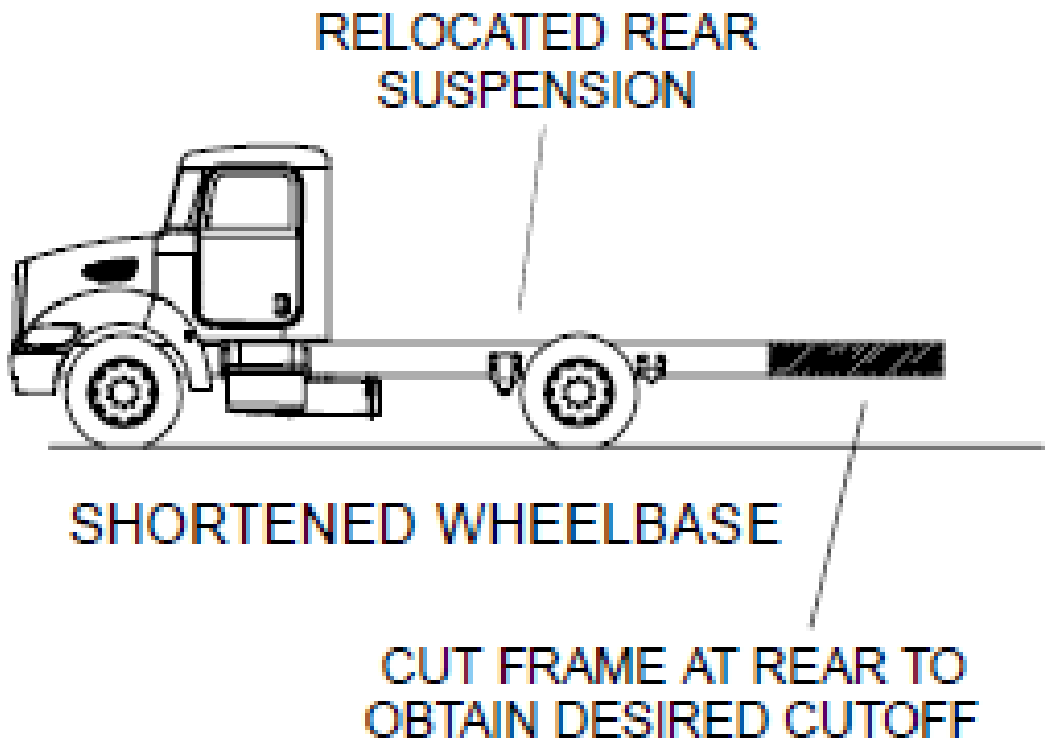

Can be shortened to meet body requirements

Warning – Heat will change rails characteristics ~ 1”- 2” from cut.

Mounting in this area should be avoided.

CHASSIS MODIFICATION – EVS

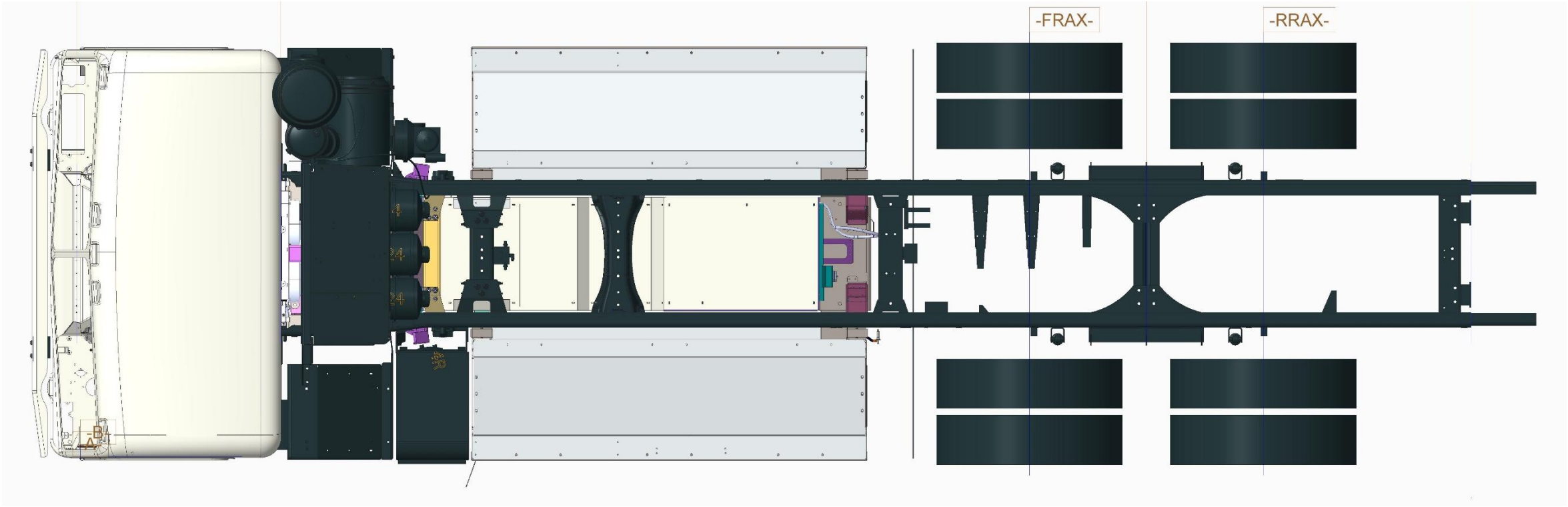

EV chassis **CANNOT** be welded, cut, or drilled. Additional drilling is available from the factory.

PETERBILT FRAME RAIL PROFILES

Single Rail

	Rail Height (in.)	Flange Width (in.)	Web Thickness (in.)	Section Modulus (cu. In.)	RBM (per rail) (in.-lbs)	Weight (per rail) (lbs/in.)
MD Only →	9 7/8	3.5	0.25	10.5	1,250,000	1.06
	10 5/8	3.45	0.313	14.8	1,776,000	1.44
	10 11/16	3.5	0.5	22.35	2,683,000	2.35
	10 3/4	3.5	0.375	17.8	2,136,000	1.74
	11 5/8	3.874	0.375	21.4	2,568,000	1.91
HD Only →	13 3/8	3.625	0.375	18.2 25.1	2,184,000 3,012,000	1.78 2.05

Double Rail

	Main Rail Height (in.)	Insert	Outsert	Section Modulus (cu. In.)	RBM (per rail) (in.-lbs)	Weight (per rail) (lbs/in.)
	10 5/8	9.875 x 2.87 x .25	None	23.6	2,832,000	2.48
	10 3/4	9.875 x 2.87 x .25	None	28.9	3,468,000	2.78
HD Only →	10 3/4	9.875 x 2.87 x .250	11.625 x 3.87 x .375	45.7	5,484,000	4.67
	11 5/8	10.75 x 3.5 x 0.375	None	37.7	4,524,000	3.65

BODY CONNECTORS OVERVIEW

- **Consistency Across Peterbilt Models**
  - Connector Types
  - Locations
  - Function
- **Two Types of Communication:**
  - Hard-Wired
  - CAN-Based (J1939)
- **Resources Available**
  - Online Body Builder Manuals

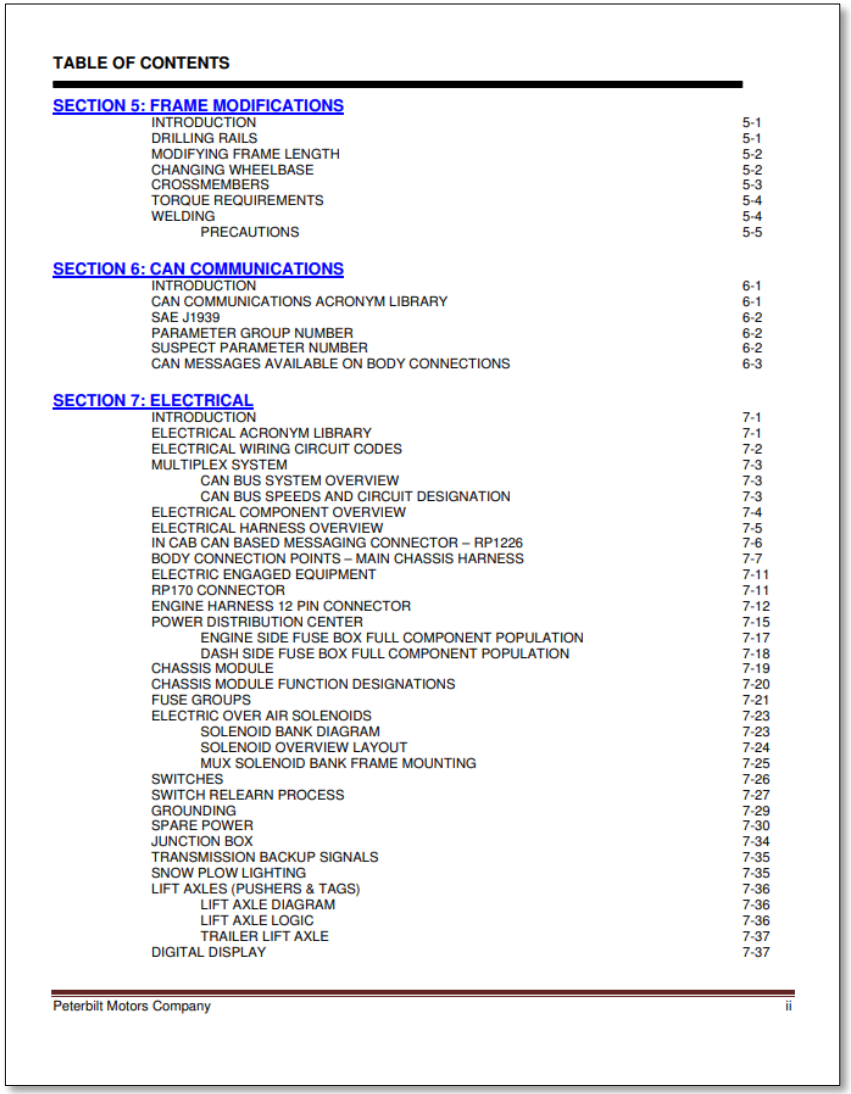

TABLE OF CONTENTS

SECTION 5: FRAME MODIFICATIONS
INTRODUCTION 5-1
DRILLING RAILS 5-1
MODIFYING FRAME LENGTH 5-2
CHANGING WHEELBASE 5-2
CROSSMEMBERS 5-3
TORQUE REQUIREMENTS 5-4
WELDING 5-4
PRECAUTIONS 5-5

SECTION 6: CAN COMMUNICATIONS
INTRODUCTION 6-1
CAN COMMUNICATIONS ACRONYM LIBRARY 6-1
SAE J1939 6-2
PARAMETER GROUP NUMBER 6-2
SUSPECT PARAMETER NUMBER 6-2
CAN MESSAGES AVAILABLE ON BODY CONNECTIONS 6-3

SECTION 7: ELECTRICAL
INTRODUCTION 7-1
ELECTRICAL ACRONYM LIBRARY 7-1
ELECTRICAL WIRING CIRCUIT CODES 7-2
MULTIPLEX SYSTEM 7-3
CAN BUS SYSTEM OVERVIEW 7-3
CAN BUS SPEEDS AND CIRCUIT DESIGNATION 7-3
ELECTRICAL COMPONENT OVERVIEW 7-4
ELECTRICAL HARNESS OVERVIEW 7-5
IN CAB CAN BASED MESSAGING CONNECTOR – RP1226 7-6
BODY CONNECTION POINTS – MAIN CHASSIS HARNESS 7-7
ELECTRIC ENGAGED EQUIPMENT 7-11
RP170 CONNECTOR 7-11
ENGINE HARNESS 12 PIN CONNECTOR 7-12
POWER DISTRIBUTION CENTER 7-15
ENGINE SIDE FUSE BOX FULL COMPONENT POPULATION 7-17
DASH SIDE FUSE BOX FULL COMPONENT POPULATION 7-18
CHASSIS MODULE 7-19
CHASSIS MODULE FUNCTION DESIGNATIONS 7-20
FUSE GROUPS 7-21
ELECTRIC OVER AIR SOLENOIDS 7-23
SOLENOID BANK DIAGRAM 7-23
SOLENOID OVERVIEW LAYOUT 7-24
MUX SOLENOID BANK FRAME MOUNTING 7-25
SWITCHES 7-26
SWITCH RELEARN PROCESS 7-27
GROUNDING 7-29
SPARE POWER 7-30
JUNCTION BOX 7-34
TRANSMISSION BACKUP SIGNALS 7-35
SNOW PLOW LIGHTING 7-35
LIFT AXLES (PUSHERS & TAGS) 7-36
LIFT AXLE DIAGRAM 7-36
LIFT AXLE LOGIC 7-36
TRAILER LIFT AXLE 7-37
DIGITAL DISPLAY 7-37

RP 1226 CONNECTOR – CAN COMMUNICATION

- Purpose: Telematics, ELD, PTO Controls, Body Controls
- Three Connectors Standard on all Models
  - No Option Codes Needed
- Two Locations Inside Cab:
  - Near OBD Connector on Left Side (Qty.: 1)
  - Behind Passenger Side of Dash (Qty.: 2)
- J1939 CAN Speeds Available:
  - 250KB K-CAN
  - 500KB S-CAN



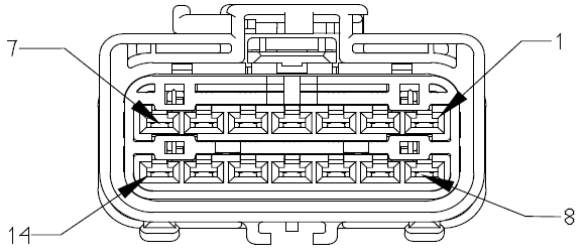

Pin	Description
1	PROTECTED POWER
2	J1939 S-CAN (+)
3	*BLANK*
4	J1939 K-CAN (+)
5	*BLANK*
6	*BLANK*
7	IGNITION POWER
8	GROUND
9	J1939 S-CAN (-)
10	*BLANK*
11	J1939 K-CAN (-)
12	*BLANK*
13	*BLANK*
14	*BLANK*

Connector Pinouts

BODY LIGHTING JUNCTION BOX

- Basic Body Lighting For All Models
- Located in Frame Rail BOC or EOF
  - Sales Code Driven
- Simple Hardwired Connections

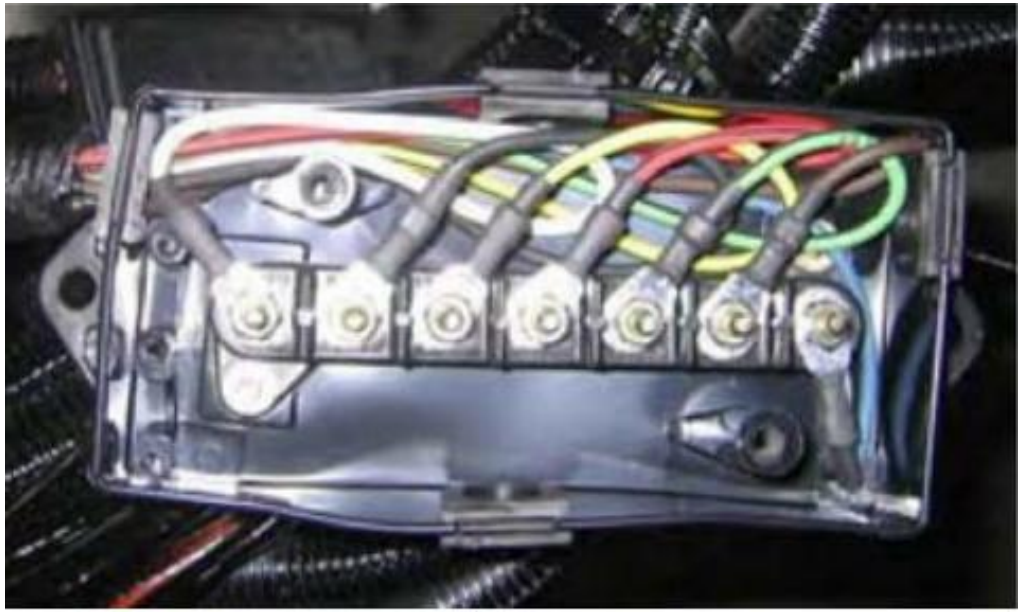

Color	Description
WHITE	GROUND
BROWN	TRAILER TAIL LAMP
BLACK	TRAILER MARKER LAMP
YELLOW	LEFT TURN TRAILER
RED	TRAILER STOP LAMP
GREEN	RIGHT TURN TRAILER
BLUE	ABS POWER (SWITCHED)

14-PIN BODY LIGHTING

- Vehicle And Trailer Lamps
  - Backup, Turn, Stop, Markers, Park
- Behind the BOC Crossmember
- End of Frame

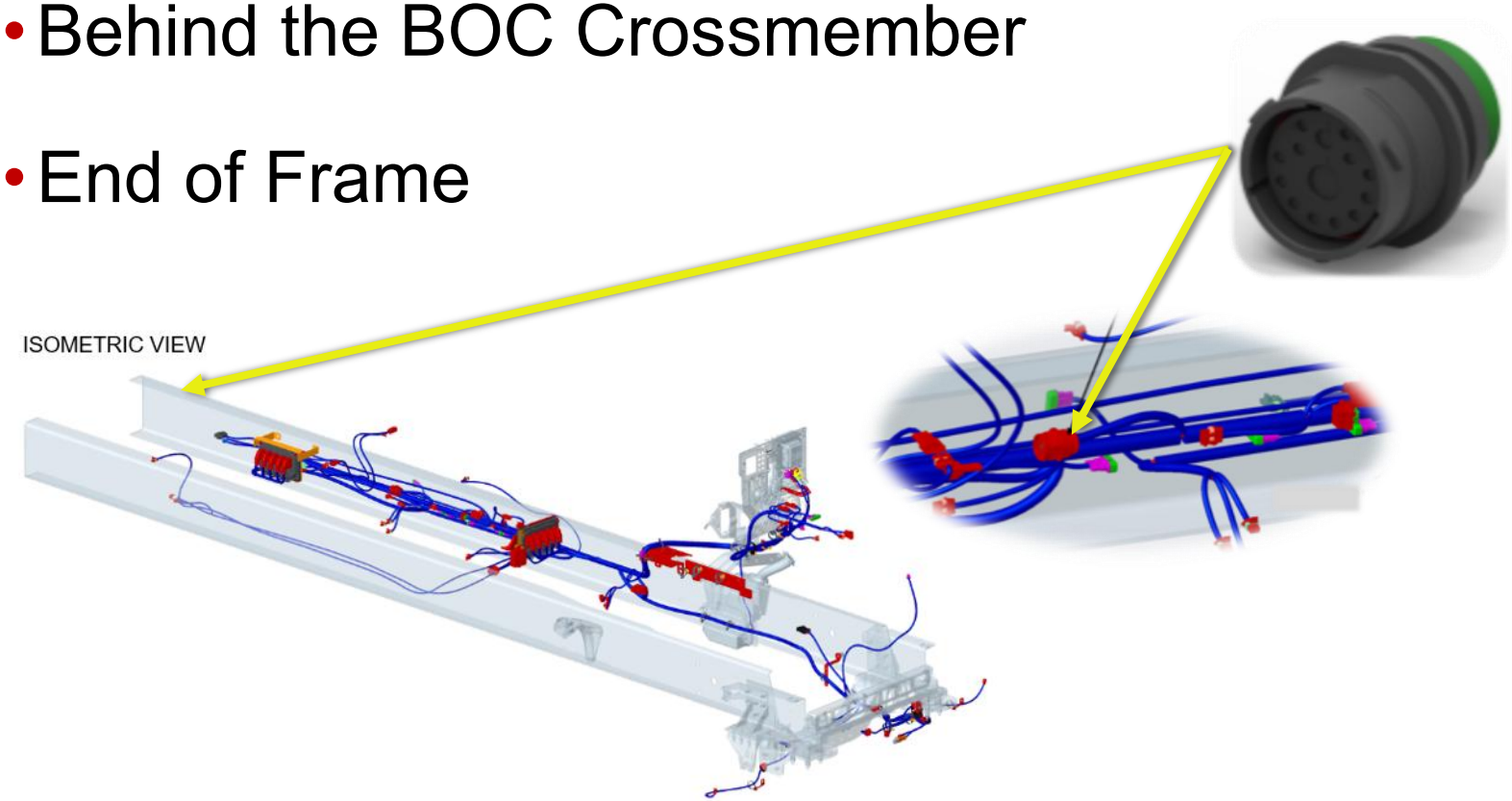

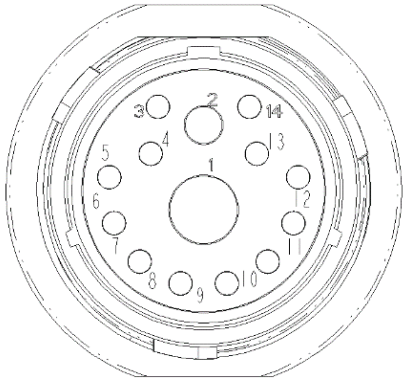

Pin	Description
1	FIREWALL GROUND
2	BACKUP LIGHTS
3	LH TURN/STOP
4	TRAILER LH TURN
5	TRAILER MARKER LAMP RELAY
6	PARK LAMPS
7	TRAILER STOP LAMPS
8	NOT USED
9	NOT USED
10	NOT USED
11	NOT USED
12	NOT USED
13	RH TURN/STOP
14	TRAILER RH TURN

Connector Pinouts

SNOWPLOW LIGHTING





Pin	Description
1	LOW BEAM LH
2	LOW BEAM RH
3	HIGH BEAM LH
4	HIGH BEAM RH
5	TURN INDICATOR LH
6	TURN INDICATOR RH
7	MARKER LAMPS
8	*BLANK*
9	SNOWPLOW GROUND
10	SNOWPLOW GROUND
11	TURN INDICATOR, LH DRL
12	TURN INDICATOR, RH DRL
13	*BLANK*
14	*BLANK*

Connector Pinouts

- Includes:
  - Switch on Dash to Control Lights
  - Connector at Front Left Frame Rail

4-PIN PTO FEEDBACK

- Standard Hardwire Connector
- Confirms PTO Is Engaged
  - PTO ON / OFF Input
  - Capable to Dual PTOs
  - Pump Mode (Split-Shaft Engaged)

Pin	Description (520 Only)
1	VEHICLE GROUND
2	#1 PTO ON / OFF
3	PTO ENABLE
4	#2 PTO ON / OFF

Pin 2-PTO 1 Engaged/ PTO On/Off
Wire #: GRA3511-XX
(Note: Same circuit as P197c
pin 5-PTO engaged/ PMC)

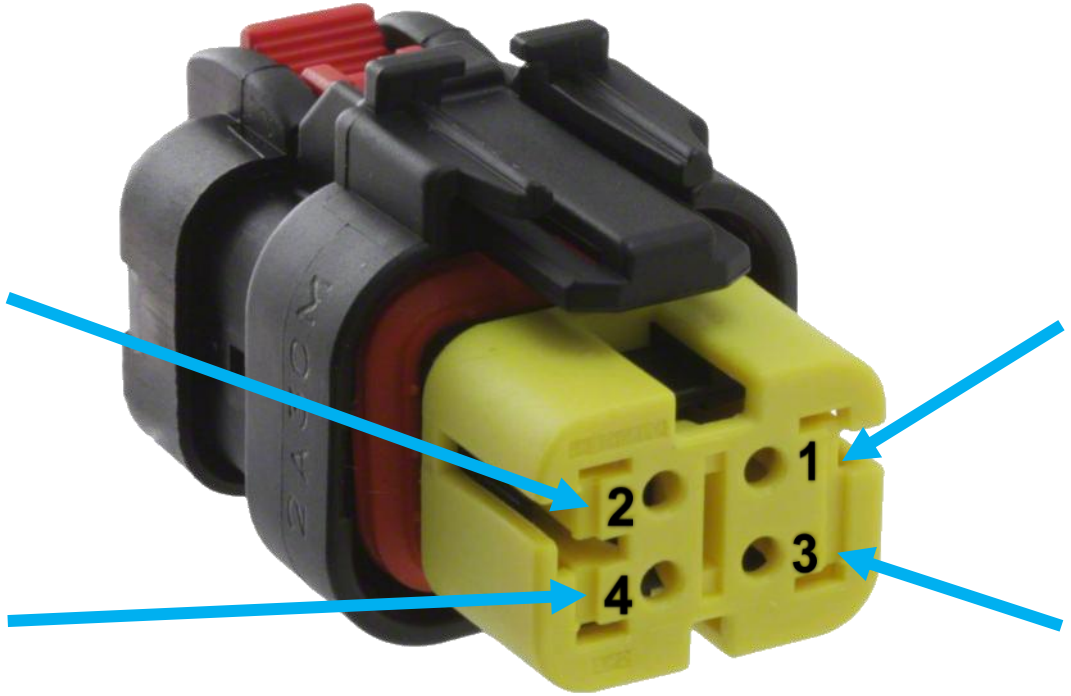

Pin 1-Firewall Ground (T151)
Wire #: WHT1512-XX

Pin 4-PTO 2 Engaged
Wire #: GRA3515-XX

Pin 3-PTO Pump Mode
Wire #: GRA4355-XX

8-PIN PRESETS CONNECTION

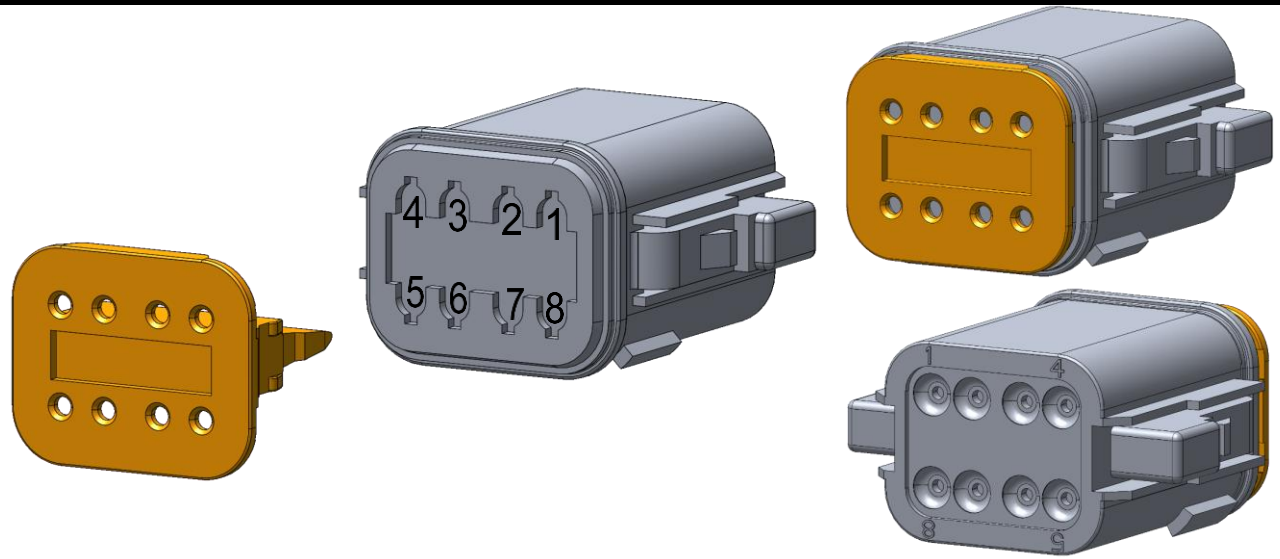

MX Engines Only

MX - Pin Description	
1	12V IGNITION SIGNAL
2	PTO INTERLOCK INPUT (Active Low)
3	REMOTE PTO PRESET 3 (Active High)
4	REMOTE PTO PRESET 2 (Active High)
5	REMOTE PTO PRESET 1 (Active High)
6	REMOTE PTO PRESET INCREMENT + (Active High)
7	REMOTE PTO PRESET DECREMENT - (Active High)
8	VEHICLE GROUND

Connector Pinouts



12-PIN REMOTE THROTTLE

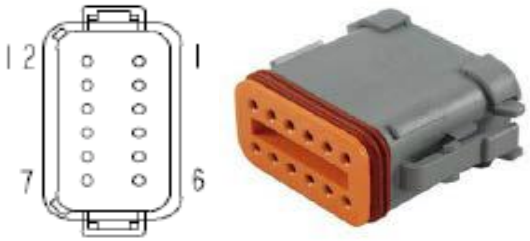

**NOTE: This 12-pin connector is automatically added with either of the following:

- "Truck" Configuration is Selected
- PTO Engagement Dash Switch is Selected

MX Engines

Pin	Description (2.1m HD)
1	REMOTE PTO RESUME (Active Low)
2	REMOTE PTO SET (Active Low)
3	SENSOR RETURN (*FROM CHASSIS MODULE*) (TWISTED TRIPLE)
4	REMOTE THROTTLE SIGNAL (*TWISTED TRIPLE*)
5	PTO ENGAGED SIGNAL (LOW = ENGAGED)
6	CRUISE ON/OFF (Active Low)
7	+12V 10A BODY IGNITION POWER
8	GROUND
9	APPLICATION SPEED LIMITER (Active High)
10	+5V POWER SUPPLY (*FROM CHASSIS MODULE*)
11	+12V **10A** BODY **IGNITION** POWER
12	BLANK

Connector Pinouts

Cummins Engines

Pin	Description
1	REMOTE PTO RESUME (Active Low)
2	REMOTE PTO SET (Active Low)
3	SWITCH RETURN (*FROM ENGINE*)
4	REMOTE THROTTLE SIGNAL (TWISTED TRIPLE)
5	PTO ENGAGED SIGNAL (LOW = ENGAGED)
6	CRUISE ON/OFF SWITCH (Active Low)
7	+12V 10A IGNITION POWER
8	GROUND
9	TORQUE LIMIT INPUT (Active Low)
10	+5V POWER SUPPLY (*FROM ENGINE*) (TWISTED TRIPLE)
11	SENSOR RETURN (*FROM ENGINE*) (TWISTED TRIPLE)
12	REMOTE PTO ON/OFF (Active Low)

Connector Pinouts

CONNECTORS SUMMARY

Hard-Wired Connections:

- 12-Pin: Remote Station Throttle Controls
- 8-Pin: Remote Throttle Preset Speeds
- 4-Pin: PTO Feedback
- Body Lighting: 14-Pin & Junction Box
- Snowplow Lights
- RP 170: Refuse Industry

12-Pin



8-Pin



4-Pin



14-Pin



Junction Box



Snowplow Lights



RP 170

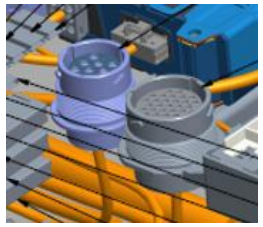

CAN-Based Connections:

- RP1226: Standard Interior Connector
- J1939: Optional Exterior Connector
- Pay Attention to Baud Speed
  - 250kB or 500kB

J1939

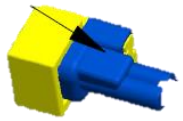

RP 1226



PETERBILT RESOURCES

- **Peterbilt.com**
  - Body Builder Manuals
  - Operator Manuals
  - Product Literature

- **Peterbilt YouTube Channel**
  - Driver Tutorials
  - Product Features
  - Body Builder Resources

- **PACCARPowertrain.com**
  - Engines
  - Transmissions
  - Axles




Peterbilt
CUSTOMERS DRIVE US