
MACK

Agenda

- **Product Updates** –Alex Lee, Senior Product Manager
- **Sales Engineering** –Kenny Palmer, Director, Sales Engineering
- **Body Builder & Electrical** –Mark Soler, Senior Engineer

Mack MD Continues Production into 2027 with Cummins B6.7 (EPA21)



New Options:

- Mack Protect (ADAS)
- Disc Brakes
- 298” Wheelbase
- PTO Prep w/ Transmission Wiring
- Vertical Exhaust (Passenger B-Pillar -Fontaine)


MACK®

New Mack Granite



All-New

- Larger Steel Cab
- 44” Mid-Roof Sleeper
- Hoods
- Bumpers
- Powertrains
- Suspensions
- LED lighting
- Camera systems: DMS, backup, CommandView
- Mack Protect (ADAS)
- Mack Connect

Interiors For Drivers

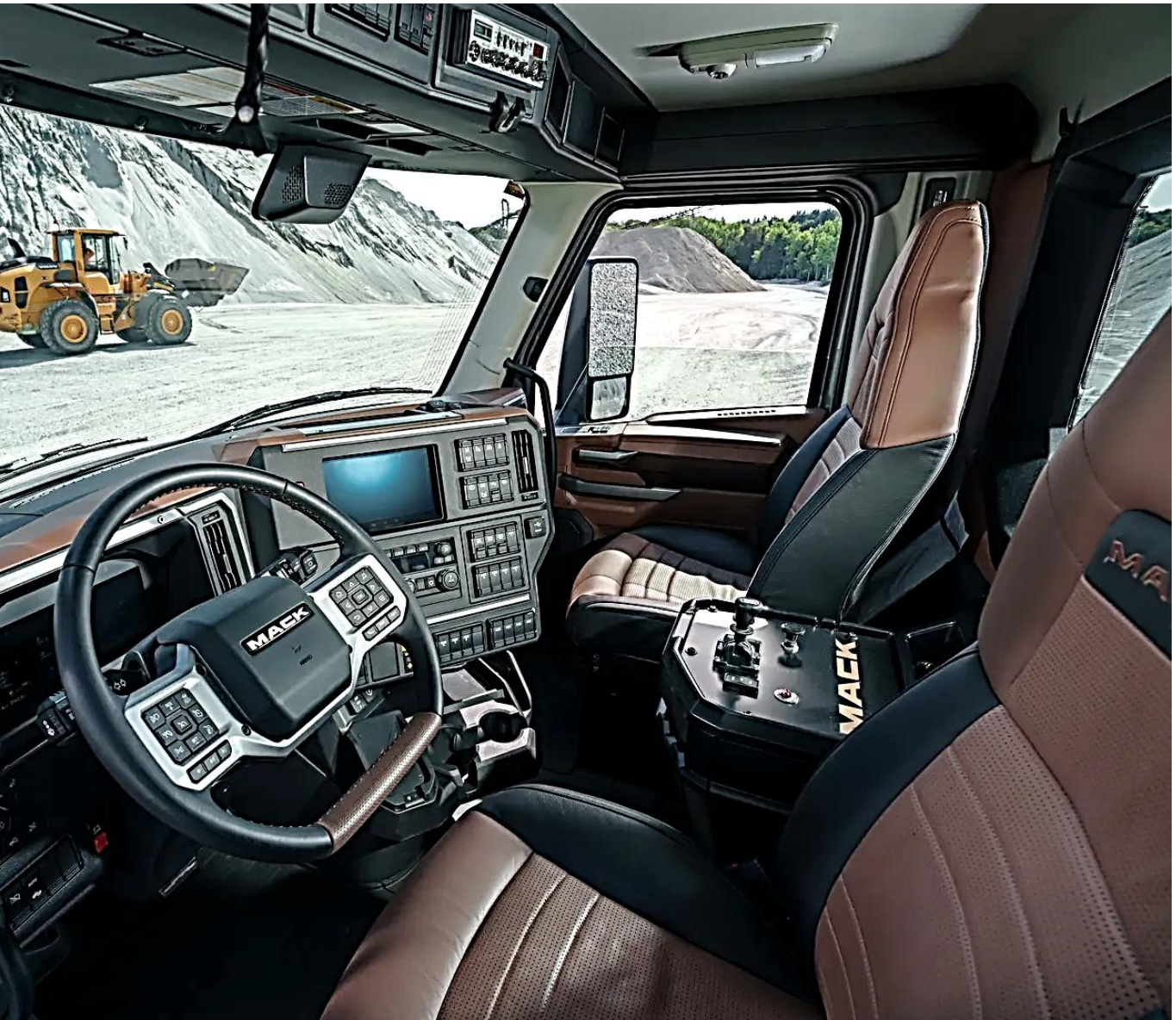

- 10% more space
- 9” wider at b-pillars
- Larger ImpactShield windshield
- Flat-bottom steering wheel
- Ergonomic premium seating with options for heating, ventilation, and massage
- In-cab battery box, under passenger seat
- Passenger 2-man bench seat option
- All LED lighting
- Driver airbag w/ available side curtain airbags
- **Body Builder Tower** (optional)
- **New Switches**

New Mack Granite Starts Production in 2027.
Legacy Granite Continues Production into 2027.





	EPA24		EPA27		
	Mack			Cummins	
	MP7 (11L)	MP8 (13L)	MP13 (13L)	X10	L9N
New Granite			New EATS & exhaust routing	New EATS & exhaust routing	
Legacy Granite	(no change)	(no change)			New EATS & exhaust routing

New Configurations & Dimensions

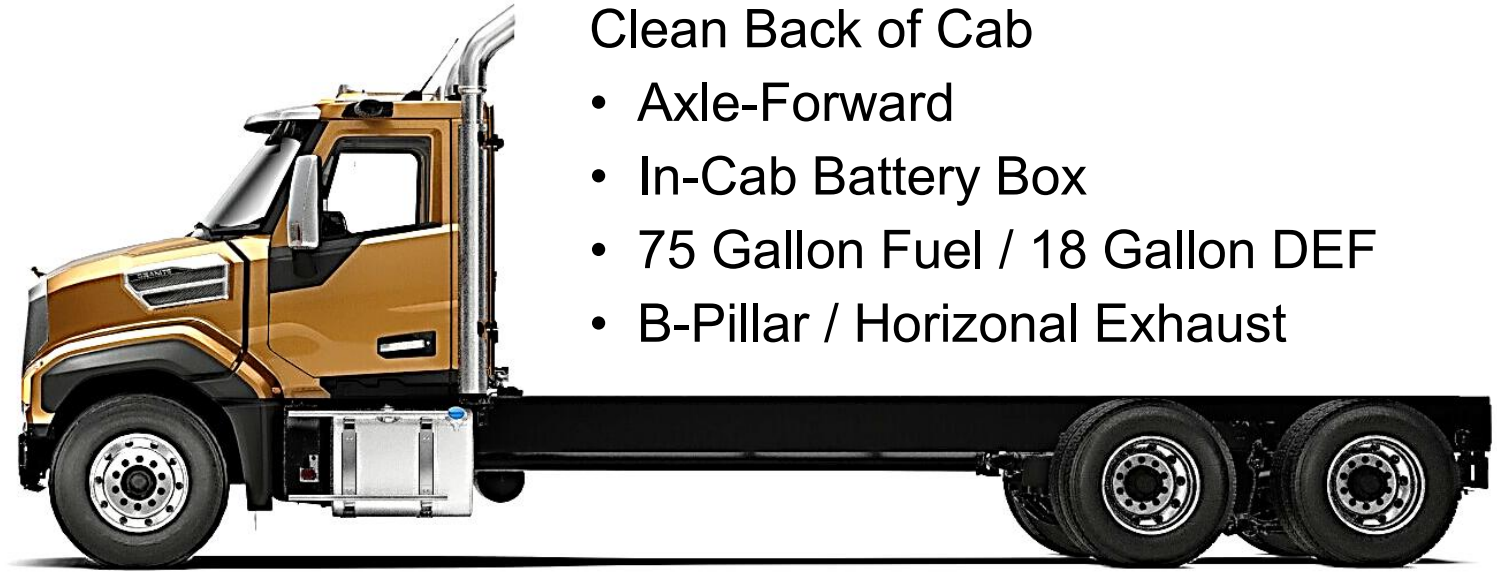

Clean Back of Cab

- Axle-Forward
- In-Cab Battery Box
- 75 Gallon Fuel / 18 Gallon DEF
- B-Pillar / Horizonal Exhaust

113.5” BBC
(AF & AB)

Dimension	AF	AB
Bumper to Axle (BA)	29”	51.1”
Axle to BOC (CA)	84.5”	62.4”
Bumper to BOC (BBC)	113.5”	113.5”

Axle-Back
Daycab



Axle-Forward
44” Sleeper



Axle-Back
44” Sleeper



MACK

New Electrical Architecture



48V –Emissions System Only

- Heater for EATS
- Dedicated Alternator
- Blue cables

24V –Entire Cab & Electrical Systems

- All lights (all LED)
- Super Capacitor and Starter
- Alternator
- Available on BodyLink IV
- Yellow cables

12V

- Standard on BodyLink IV
- Red cables

New Electronic Brake System (EBS)



EBS

- Improved braking performance, traction control, and ABS
- Anti-flat spotting ABS on all axles, <u>including auxiliary axles</u>

Electronic Park Brake

- Easy to apply & release
- Auto park brake engagement with anti-rollaway protection

Sales Engineering and Body Integration

Kenny Palmer, Director, Sales Engineering

Focusing On "The Four Corners"

Adaptations
Integration

Specs in Sales
Configurator



Order Board
Maintenance

External
Communication

How To Find Us

- *1-800-TNT-MACK (868-6225), Mon-Fri, 9-5pm EST*
- *Sales.Engineering@Macktrucks.com*
- *Dealer Bulletins on Truck Dealer Portal*
- *Participation at most major trade shows*

Business Development – Body Integration
Matt.Mazur@macktrucks.com

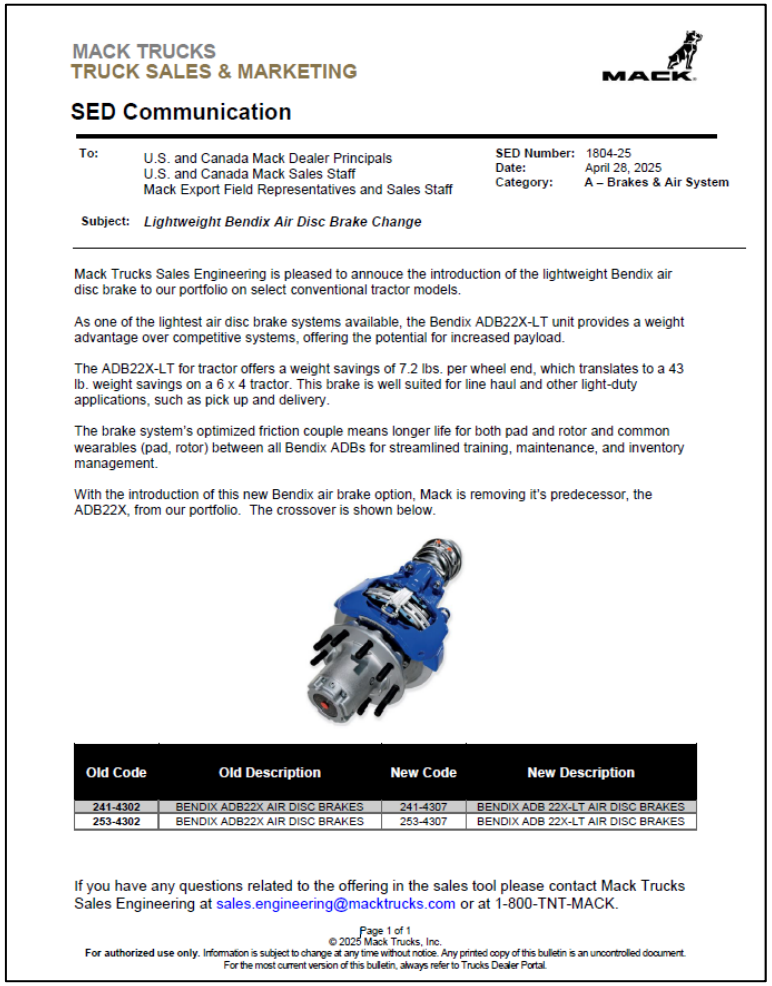

MACK TRUCKS
TRUCK SALES & MARKETING

MACK

SED Communication

To: U.S. and Canada Mack Dealer Principals
U.S. and Canada Mack Sales Staff
Mack Export Field Representatives and Sales Staff

SED Number: 1804-25
Date: April 28, 2025
Category: A – Brakes & Air System

Subject: *Lightweight Bendix Air Disc Brake Change*

Mack Trucks Sales Engineering is pleased to annouce the introduction of the lightweight Bendix air disc brake to our portfolio on select conventional tractor models.

As one of the lightest air disc brake systems available, the Bendix ADB22X-LT unit provides a weight advantage over competitive systems, offering the potential for increased payload.

The ADB22X-LT for tractor offers a weight savings of 7.2 lbs. per wheel end, which translates to a 43 lb. weight savings on a 6 x 4 tractor. This brake is well suited for line haul and other light-duty applications, such as pick up and delivery.

The brake system's optimized friction couple means longer life for both pad and rotor and common wearables (pad, rotor) between all Bendix ADBs for streamlined training, maintenance, and inventory management.

With the introduction of this new Bendix air brake option, Mack is removing it's predecessor, the ADB22X, from our portfolio. The crossover is shown below.

Old Code	Old Description	New Code	New Description
241-4302	BENDIX ADB22X AIR DISC BRAKES	241-4307	BENDIX ADB 22X-LT AIR DISC BRAKES
253-4302	BENDIX ADB22X AIR DISC BRAKES	253-4307	BENDIX ADB 22X-LT AIR DISC BRAKES

If you have any questions related to the offering in the sales tool please contact Mack Trucks Sales Engineering at sales.engineering@macktrucks.com or at 1-800-TNT-MACK.

Page 1 of 1
© 2025 Mack Trucks, Inc.
For authorized use only. Information is subject to change at any time without notice. Any printed copy of this bulletin is an uncontrolled document.
For the most current version of this bulletin, always refer to Trucks Dealer Portal.

Why Integration?

WE SHARE THE SAME CUSTOMERS

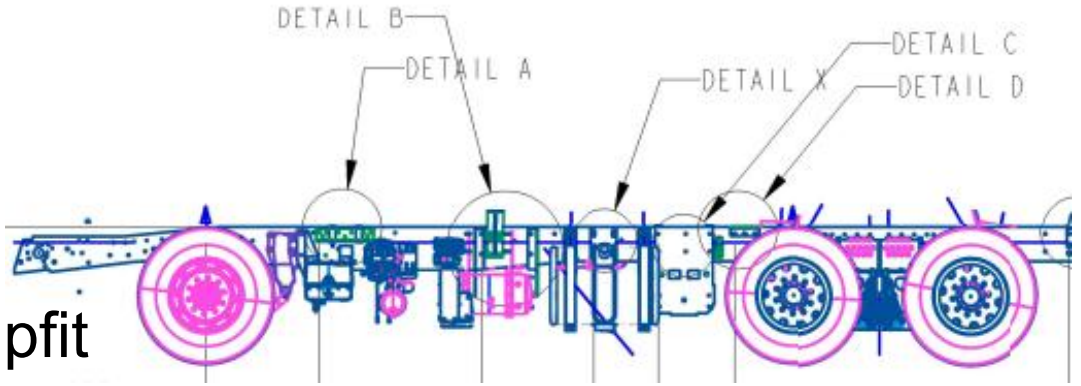

- Partnering with body companies to optimize upfit
  - Consistency Improves
    - Quality
    - Repeatability
    - Throughput
    - Minimizes Rework
- Potential to pass savings to customers
- Improved aftermarket support



Regional Sales Engineering Team

The regional sales engineer is a primary point of contact within sales engineering.

- Can provide technical expertise, put you in contact with the right person, or direct you toward an answer
- Can give status updates on quotes and escalations
- Help with quote and specification optimization

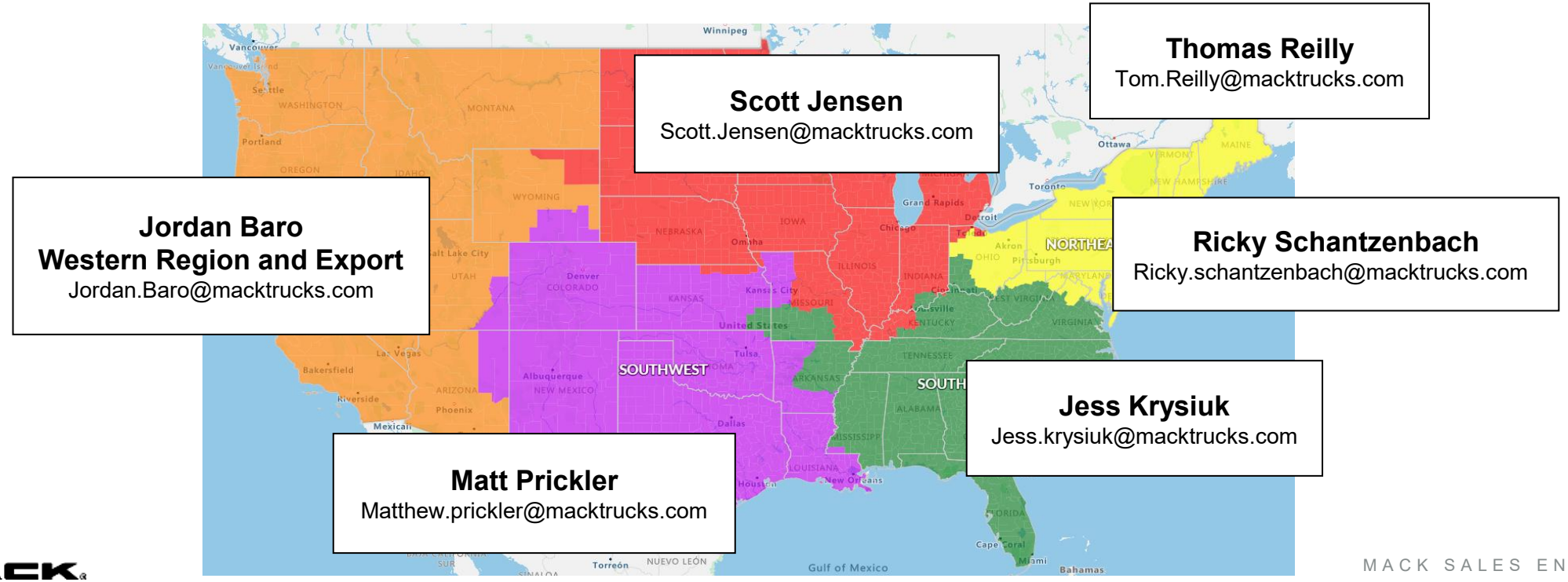

Thomas Reilly
Tom.Reilly@macktrucks.com

Scott Jensen
Scott.Jensen@macktrucks.com

Jordan Baro
Western Region and Export
Jordan.Baro@macktrucks.com

Ricky Schantzenbach
Ricky.schantzenbach@macktrucks.com

Jess Krysiuk
Jess.krysiuk@macktrucks.com

Matt Prickler
Matthew.prickler@macktrucks.com

Standard Packaging Solutions

6X4 AXLE FORWARD EXAMPLE

Sales Code	Allowable LH Tank Volume Gallons	DEF Volume Gallons	Allowable RH Tank Volume Gallons	Batt. Qty.	Battery Location	DEF Location
MPK-GF20	75, 95, 100	18	- -	2	In-cab	LH combo tank
MPK-GF21	125	23				
MPK-GF24	75, 100	18		4	Temp. mounted	
MPK-GF25	125	23				

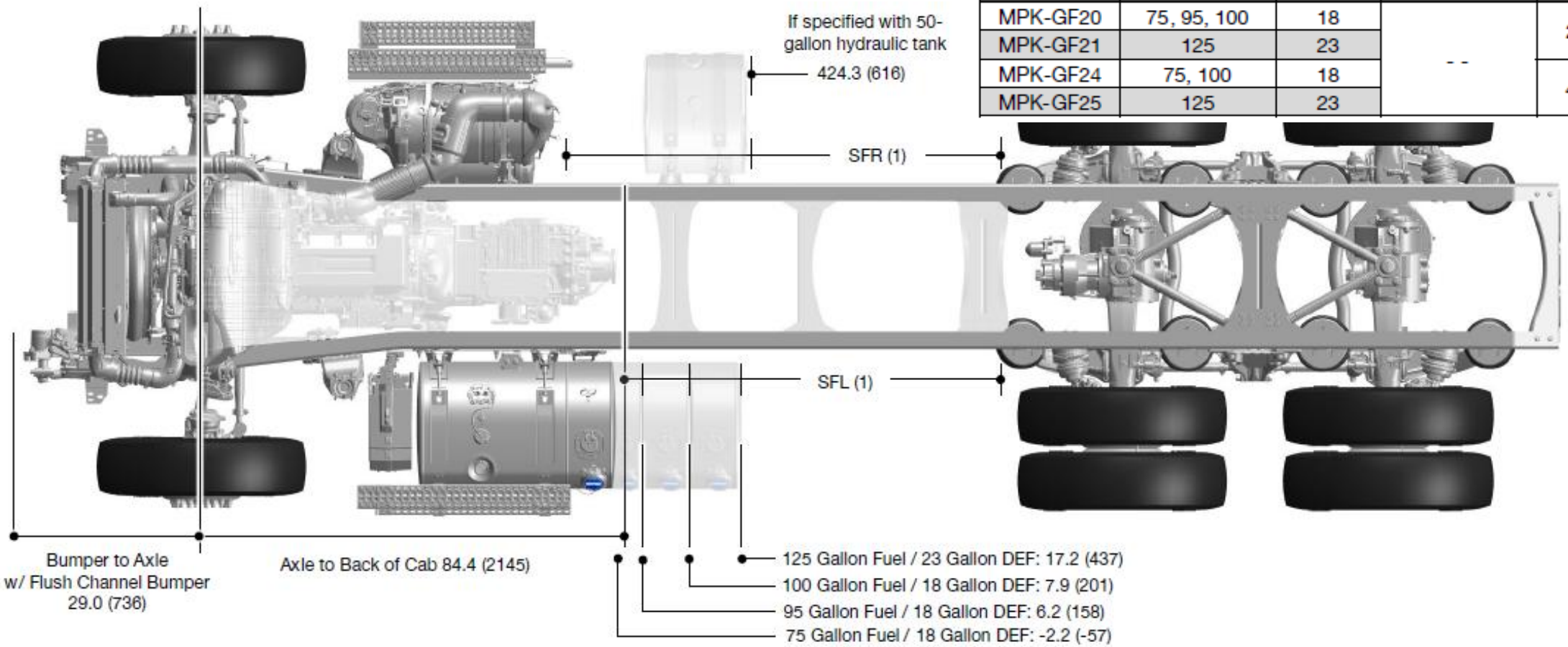

Pneumatic Distribution Center (PDC)

- Unique crossmember with components to support critical air and brake systems
- 3 different BOC locations (PDCX5150, 5500, 6100)
- **Cannot be relocated**

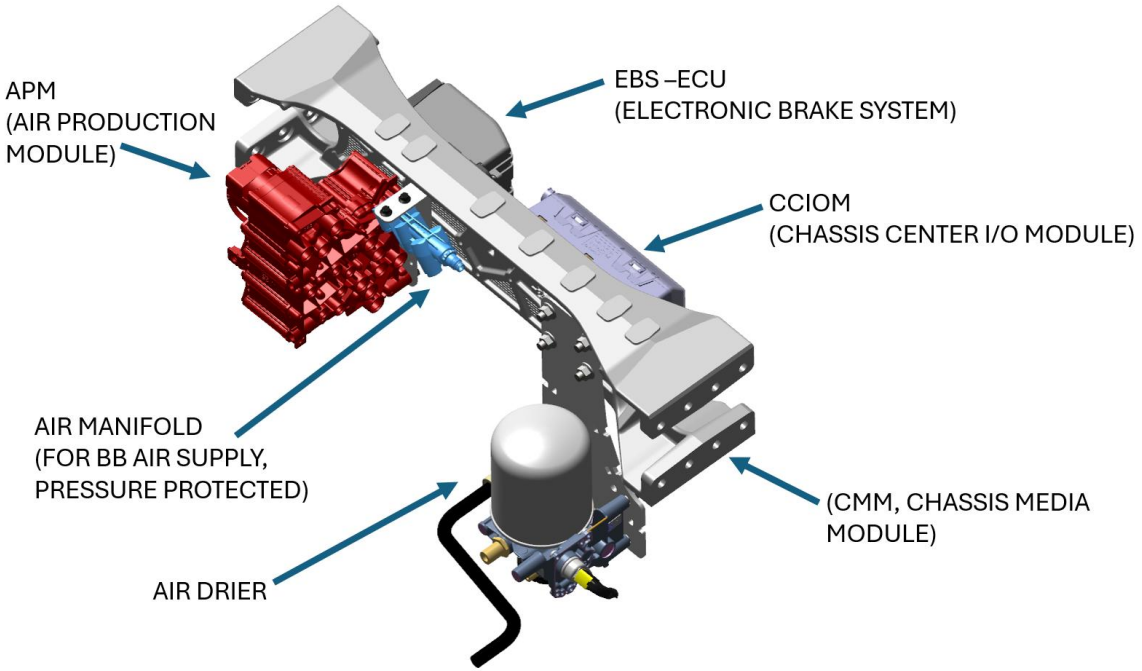

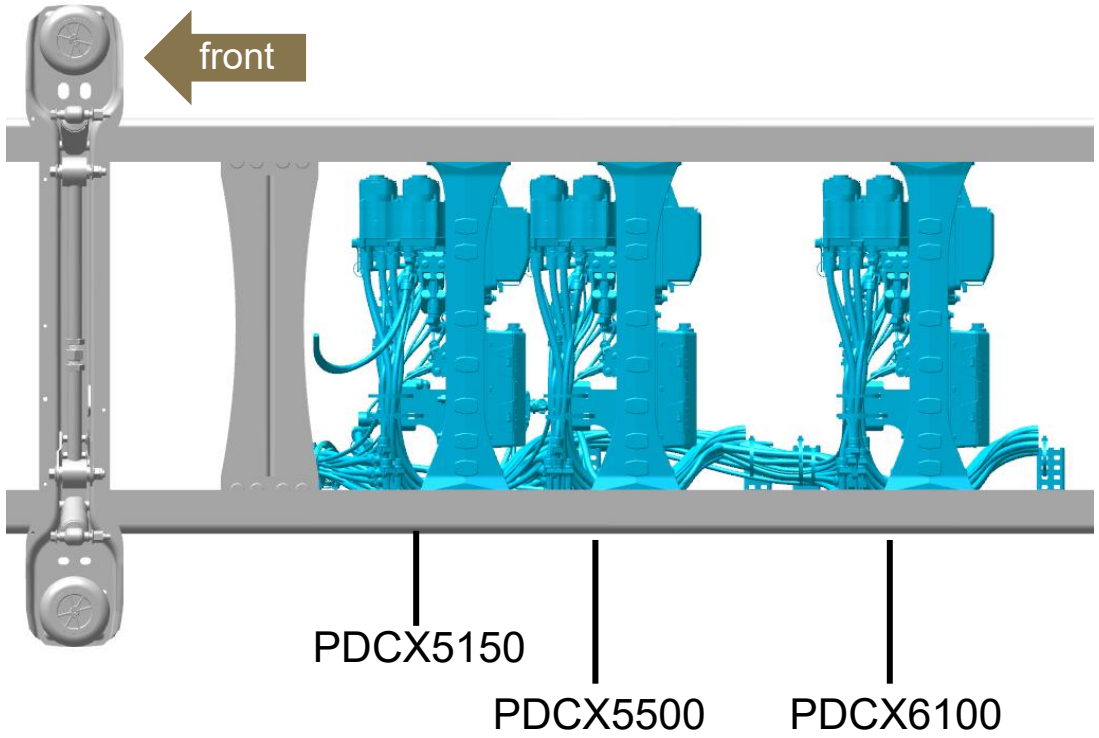

Body Builder and Electrical Overview

Mark Soler, Senior Engineer

New Standard in Custom Integration

- Electrical provisions support 12V and 24V Bodies
- Auxiliary Axle Prep kits
- Configurable Flex auxiliary switches
- Flexible pin assignments
- Dedicated Body Builder CAN network
- Advanced vocational programmable features
- Body Builder Data Logging and Diagnostics capabilities



Chassis Interfaces – Connectors

Connector voltage determined by voltage of Body Builder Module (BBM) and Body Builder Electrical Center (BBEC) specified by N2B variant family.

Name / [Variant]	Connector (s)	Con. Voltage Version	Features							Use Cases
			Power	Ignition	Ground	Lighting	Body Builder I/O	Aux Flex Switch Outputs	BBCAN	
Bodylink IV [BBCHAS4] **(std. GR)**	29-pin 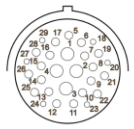 Combined Power / Ignition / Lighting / Auxiliary I/O	12V	30a	30a	N	Stop, Tail, L/R Turn, L/R Turn/ Stop, Reverse	7 inputs, 3 outputs	AESW4: 4 AESW8B*: 5 + 1 2 position (Up/Down)	Yes	Standard Mack Granite Chassis Connector Ridged bodies lighting PTO Functions from chassis
		24V	15a	15a	N			4		24V bodies Ridged bodies lighting PTO Functions from chassis
RP170 [BBCHAS5]	8-Pin Power 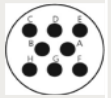 14-Pin Lighting  31-Pin Function 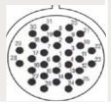	12V	20a + 15a	2 x 20a 1 x 25a (w/ reverse)	3 x 25a 1 x 75a (Lighting)	Stop, Tail, L/R Turn, L/R Turn/ Stop, Reverse	8 inputs, 7 outputs, V Speed output, Tacho output	2	Yes	Primarily Refuse and Concrete Mixers/Pumpers
		24V	2 x 10a	2 x 20a 1 x 25a (w/ reverse)	3 x 15a 1 x 75a (Lighting)			N		24V Concrete Mixers/Pumpers
[BBCHAS7]	3-Pin Aux Switch 	12V	N	N	22a	N	N	2	N	Hwy/Regional/Heavy Haul only needing Aux outputs for lighting/ accessories.

AESW8B: Only offered with 12V BBCHAS4. 6 (5 mono + 1 mono 3-position) accessible at BL. 1 mono at BBEC, 1 mono 3-position accessible at cab pass through)

Chassis Interfaces – Connectors Location

Bodylink (*std. GR)

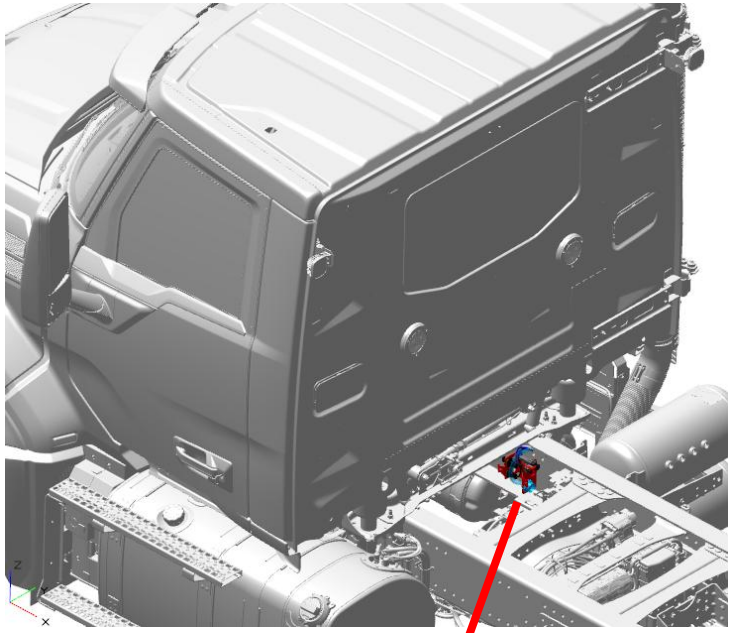

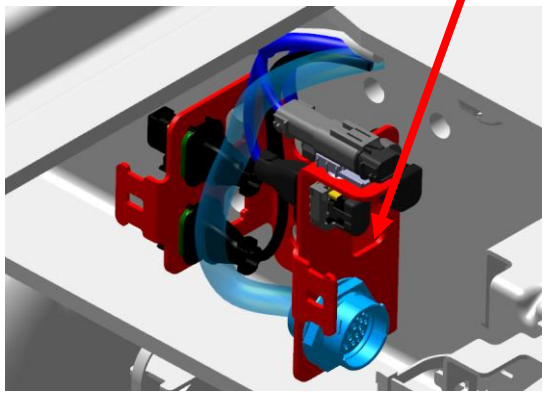

RP170

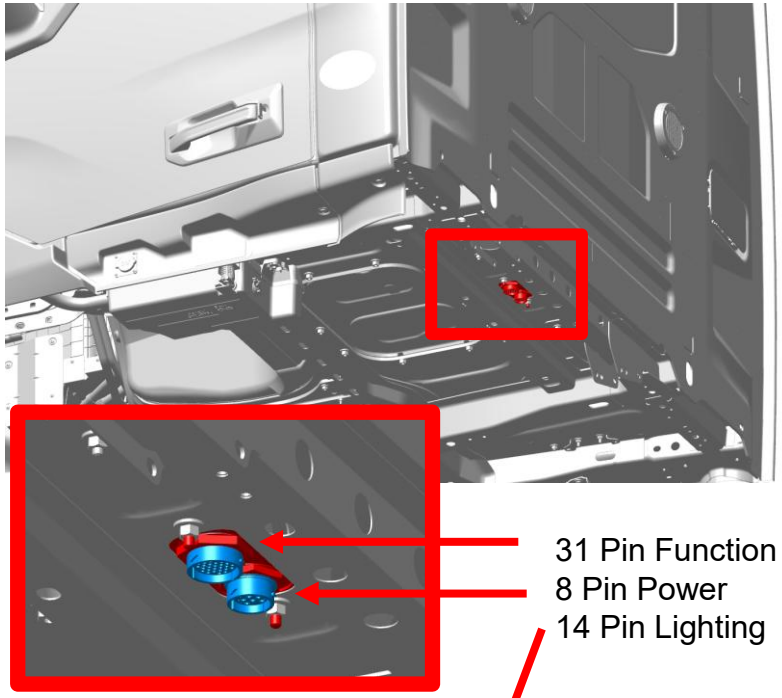

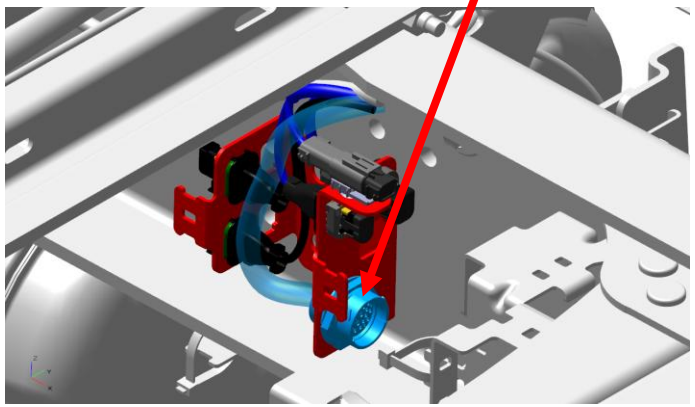

BBCHAS7

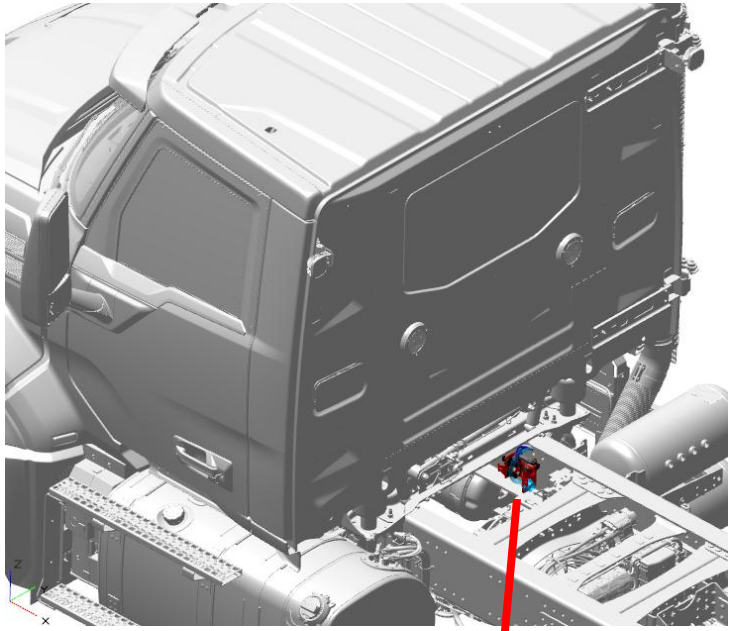

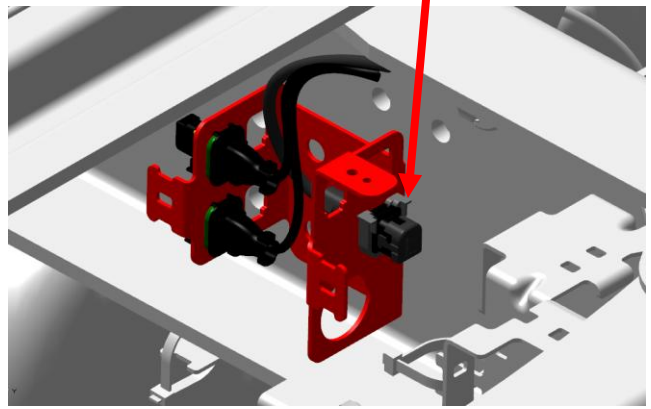

Where can BB get power?

Power Provisions - Summary

Location	Name / [Variant]	Voltage Version	Power	Ignition	Ground
Chassis Connector	**Bodylink [BBCHAS4] 29-pin**	**12V**	**30a**	**30a**	**N (Chassis Only)**
		24V	15a	15a	N (Chassis Only)
	RP170 [BBCHAS5] 8-Pin Power	12V	20a + 15a	2 x 20a 1 x 25a (w/ reverse)	3 x 25a
		24V	2 x 10a	2 x 10a 1 x 15a (w/ reverse)	
	[BBCHAS7] 3-Pin (2 Aux Flex Switches)	12V	N	2 (w/ Flex Switch activation)	22a
Chassis Fuse Box	**Chassis-Mounted Electrical Center (CMEC)**		**24V: 200a + 12V: 150a**	**N**	**N (Chassis Only)**
Cab	**Body Builder Electrical Center – In Dash (BBEC)**	**12V**	**10a**	**10a**	**10a + Ground bus**
		24V	10a	10a	10a + Ground bus
	Rear Body Builder Electrical Center (RBBEC)	12V	40a*	40a*	Ground bus
		24V	40a*	2 x 30a*	Ground bus

*RP170 pulls power from RBBEC

Values in **bold/green** are standard offer on Granite

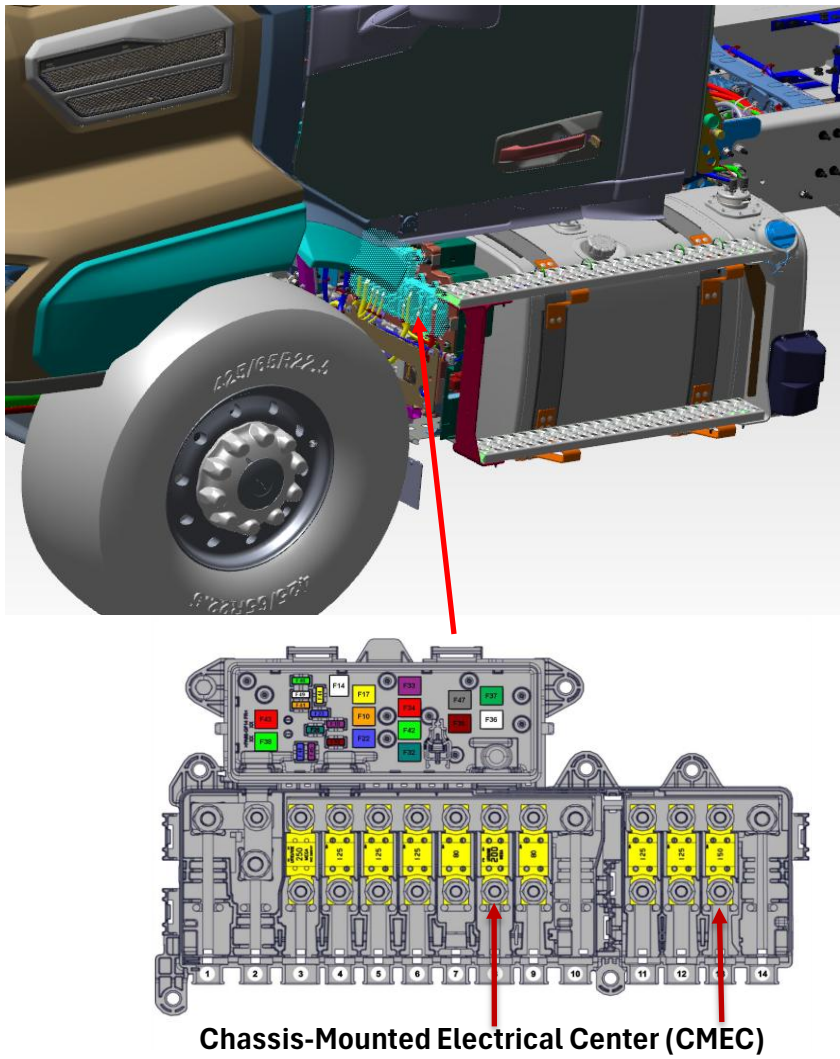

Chassis-Mounted Electrical Center (CMEC)

Lighting Options

Features available with lighting functions:

- Activation Dash Switch, BB-CAN, and/or Chassis request
- Function Timeouts
- Vehicle Speed Threshold for Activation/Deactivation

- Work Lights: Recessed, rear wall mounted Back-of-Cab (BOC) lighting
  - Factory Single/Dual working light options

- Side Reverse Lights: (Switch active + Opt. Auto On w/ reverse)
  - Factory mounted High and low fairing-mounted lights
  - Factory Prep-kits and AM upfits available



- Roof Mounted Beacon Lights
  - Factory mounted Amber flashing lights (24V)
  - Factory Prep-kit (24V Wiring + Flex Switch + Programming)



- Snow-plow lighting Prep kit
  - Wiring + Flex Switch + Programming



Single and Dual recessed BOC lights



High and Low mounted Reverse lights

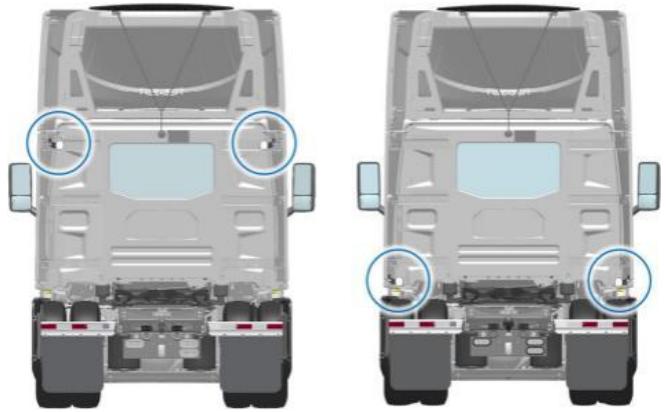

Factory mounted Beacon lights



Adding Aux Axles to New Granite



1. Aux Axle Prep Sales Code

- Standard from Factory
- Electrical Harness Prep
- Additional solenoid(s)
- Dash flex switch blank



2. Auxiliary Axle

- Aux Axle with Wheel Speed provision
- Gauge/ Regulator



3. Mack Enable kit

- EPM (electro-pneumatic module)
- Wheel speed sensors
- QRV (quick-release valve)
- Lift Control Valve
- Dash flex switch

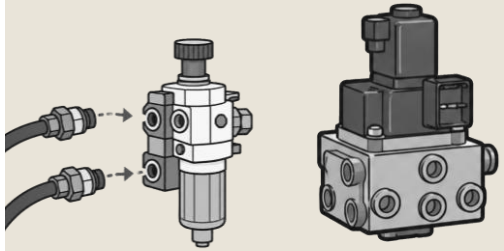

4. Update Software

- Workshop Toolbox



Flexible Auxiliary Switches (5IB Family)

- Flexible switch driven, software-controlled auxiliary outputs
- Factory configured as standard switch (i.e. Press -> Output turns on)
- Switch locations and outputs reconfigurable
- Outputs can be reconfigured with activation/deactivation conditions such as:
  - Vehicle speed
  - Activation in Living (Key Off, ECUs awake), Accessory, Pre-running (Ignition), kept active during cranking
  - Functional timeout elapsed
  - Programmable Logics
- Body Builder CAN accessible
  - Activation/Deactivation request
  - Aux Output Status
- Number of Flex Switches and outputs determined by Aux Switch Family (5IB), Chassis Interfaces (4QB), and BBEC voltage
- Outputs accessible at Chassis interfaces, BBEC (BBCHAS4 only), and Cab Passthrough (BBCHAS4 only)

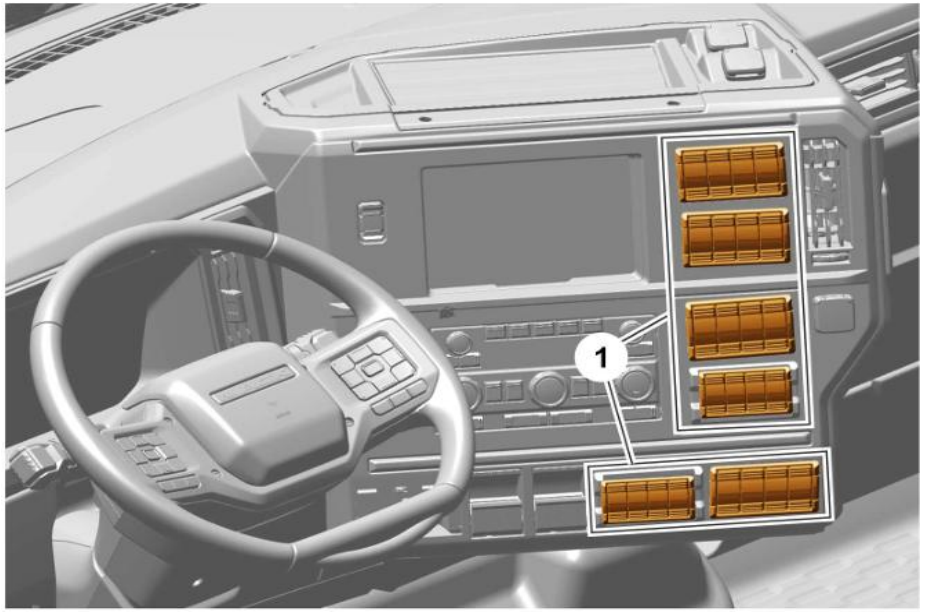

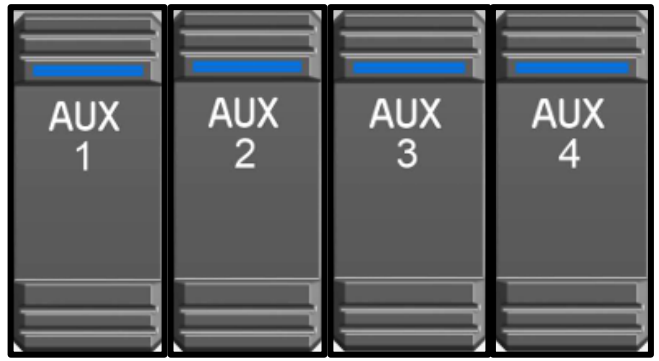

(*std. GR)

Variant	# of Switches	Application
AESW2B	2 monostable	HWY/REG/VOC
AESW4	**4 monostable**	**HWY/REG/VOC**
AESW8B	6 x monostable 2 x 3 position monostable	VOC

MACK

Hardwire Auxiliary Switches (EAX Family)

Hardwired Auxiliary Switches (EAX Family)

- Standard, on/off bi-stable switches that run through the BBEC to 2-pin connectors in the BB Bracket.
- Voltage of HW Aux Switches is determined by BBEC Voltage (N2B Family)
- The number of battery and ignition fed switches varies with the number of switches specified.
- Selectable in addition to Flex Switches

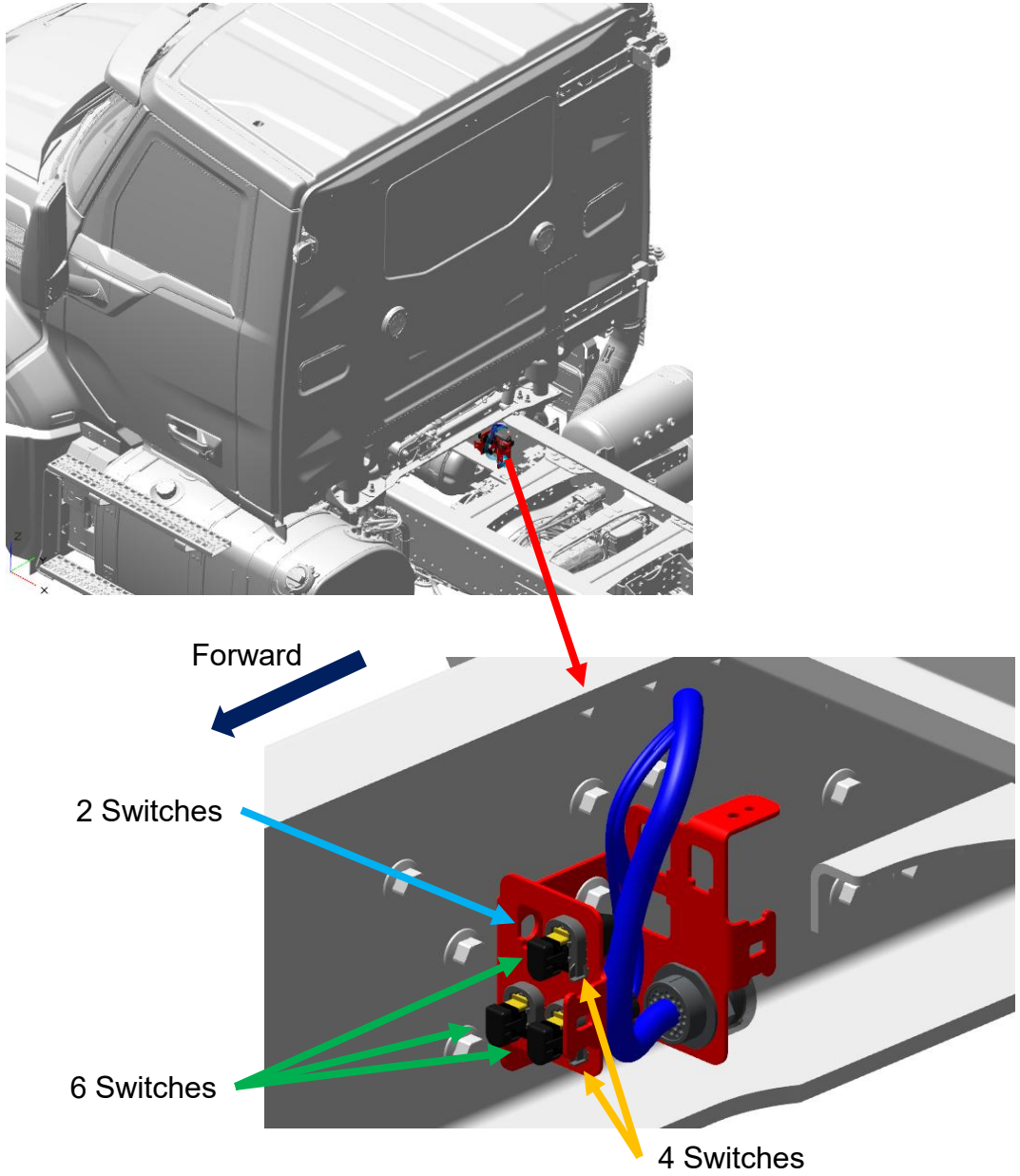

Variant	# of Switches	Rating each	Application
AUXSW-2	2	10a	HWY/REG/VOC
AUXSW-4	4	10a	HWY/REG/VOC
AUXSW-6	6	10a	VOC, N/A w/Allison Transmission

Body Builder Electrical Centers

"The Body Builder's playground"

- Serves as a location for BBs to make modifications, add relays, and repin connectors for their applications.
- Provides fuse and relay provisions for auxiliary switches and auxiliary I/O
- Interfaces for accessing Body Builder functions
- Factory installed components variant driven
- BBEC
  - Mounted in center dash
  - 12V Standard, 24V Optional
  - Provisions for Hardwired & Flex Aux Switches, Bodylink, Transmission functions, Pulsed Speed, Body Builder Module (BBM) I/O
- RBBEC
  - Mounted at back of cab (Daycab only)
  - Optional* in 12V or 24V
  - Provisions for adding HW & Flex Aux Switches, additional BBM I/O, power, ground, and ignition.
  - Great option for Body Builder Tower installs

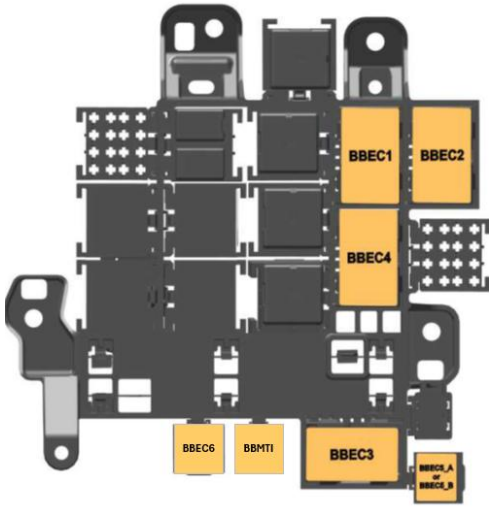

BBEC

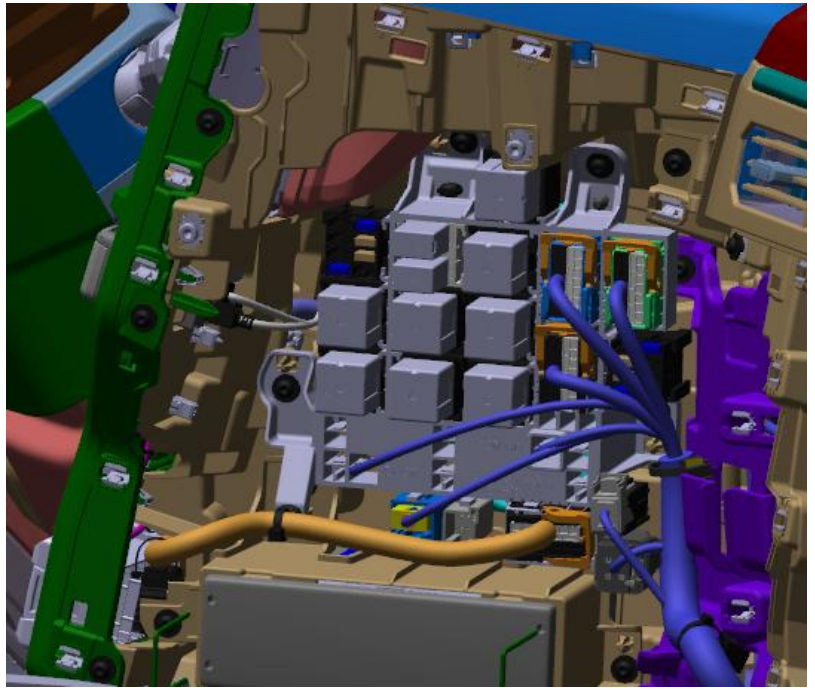

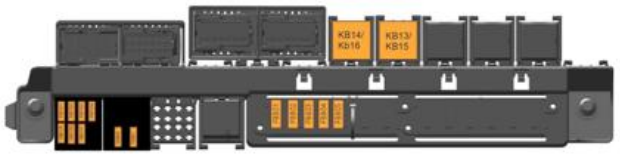

Rear BBEC (RBBEC)

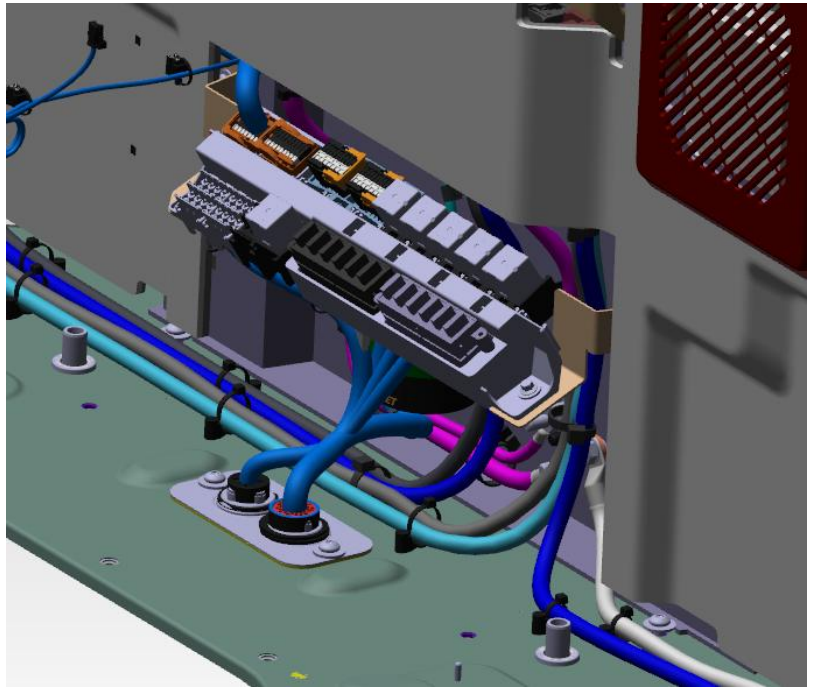

MACK

*Required for RP170

Body Builder Module (BBM)

- Body Builder’s gateway to the truck
- 12V and 24V Input/Output (I/O) versions
- 38 Digital inputs for triggering vehicle functions
- 26 Digital outputs to drive relays & solenoids
- 2 Analog & 1 Frequency/PWM inputs
- 2 Frequency/PWM outputs
- Dedicated Body Builder CAN Network
- BBM Flexible Pin Mapping allows for Body Builder customization of factory Interfaces (Bodylink, RP170, BBEC, RBBEC, etc.)

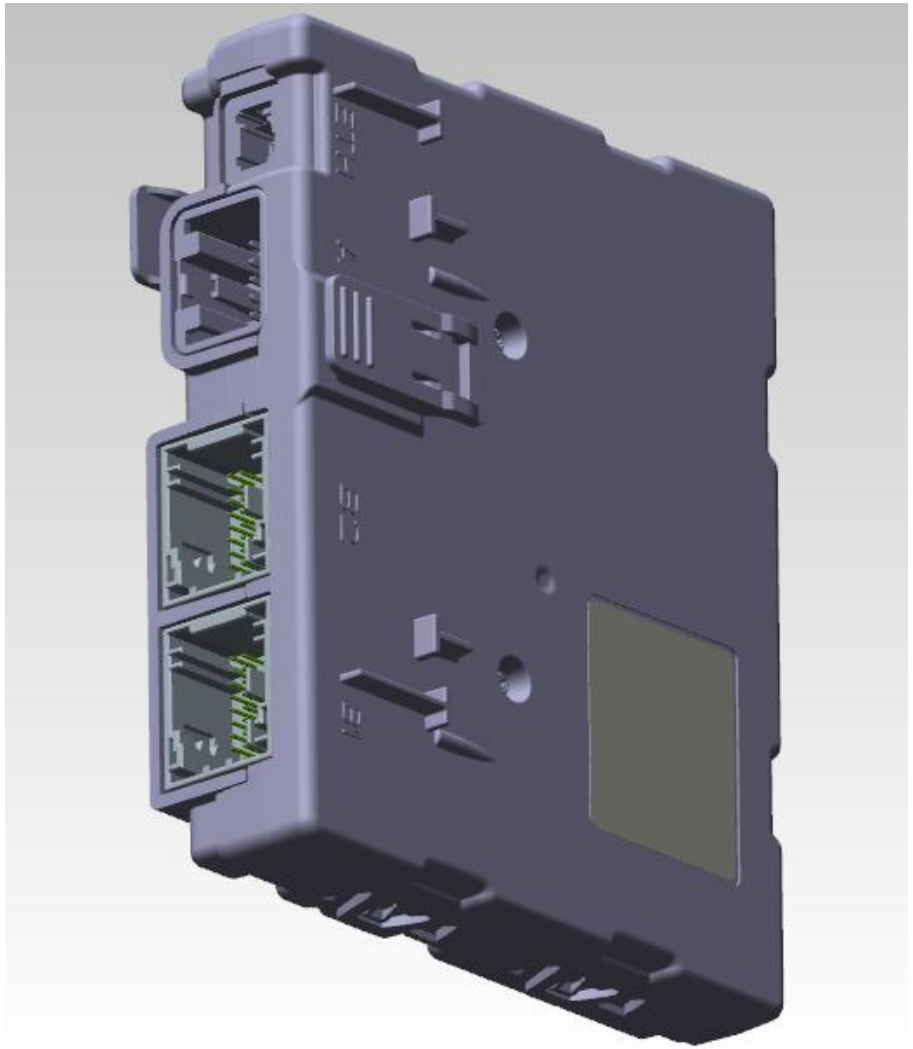

I/O Flexible Pinning Example – 29 pin connector

Default BodyLink Pinning Configuration

Pin	Type	Default Function	Function Remappable?
1	Power	Battery Power (30A)	
2	Power	Ignition Power (30A)	
3	Lighting	Stop Lamp (10A)	
4	Lighting	Tail/Marker Lamp (10A)	
5	Lighting	Reverse Signal (15A)	
6	Lighting	Left Turn (5A)	
7	Lighting	Right Turn (5A)	
8	Aux Output	Aux Flex Switch #1 (12A)	Yes, limited to Aux 1-8 switches
9	Aux Output	Aux Flex Switch #2 (15A)	Yes, limited to Aux 1-8 switches
10	Aux Output	Aux Flex Switch #3 (12A)	Yes, limited to Aux 1-8 switches
11	Aux Output	Aux Flex Switch #4 (15A)	Yes, limited to Aux 1-8 switches
12	Aux/ Digital Output	Aux Flex Switch #5 (15A)	Yes
13	Aux/ Digital Output	Aux Flex Switch #7 up (15A)	Yes
14	Aux/ Digital Output	Aux Flex Switch #7 down (15A)	Yes
15	Digital Output	Park Brake Active	Yes
16	Digital Output	Neutral Signal	Yes, limited to Engine Running, Park Brake, Neutral, or Reverse Gear
17	Digital Input	Body out of Position Indicator	Yes
18	Digital Input	PTO #1 Request	Yes
19	Digital Input	PTO #2 Request	Yes
20	Digital Input	Engine Speed Control On/Off	Yes
21	BBCAN H	Body Builder CAN	
22	BBCAN L	Body Builder CAN	
23	Digital Input	ESC Set/Decel	Yes
24	Digital Input	ESC Set/Resume	Yes
25	Digital Input	ESC Selector 1	Yes
26	Digital Output	PTO Active	Yes
27	Lighting	Left Turn/Stop (5A)	
28	-	-	
29	Lighting	Right Turn/Stop (5A)	

- 7 Aux Switch outputs
- 6 Remappable digital output pins
- 7 Remappable digital input pins

Aftermarket Pinning remapped

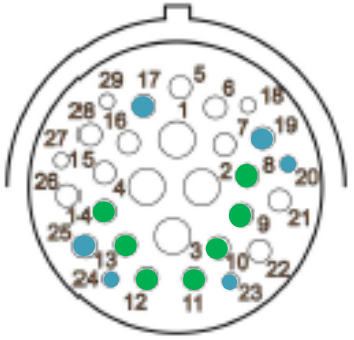

Dump Bed Configuration

Pin	Type	Custom Configuration
1	Power	Battery Power (30A)
2	Power	Ignition Power (30A)
3	Lighting	Stop Lamp (10A)
4	Lighting	Tail/Marker Lamp (10A)
5	Lighting	Reverse Signal (15A)
6	Lighting	Left Turn (5A)
7	Lighting	Right Turn (5A)
8	Aux Output	**Aux Flex Switch #1 (12A) -> Tailgate Unlock**
9	Aux Output	**Aux Flex Switch #2 (15A) -> Bed Vibrator**
10	Aux Output	**Aux Flex Switch #3 (12A) -> Strobe Light**
11	Aux Output	**Aux Flex Switch #8 up (15A) -> Tarp Open**
12	Aux/ Digital Output	**Aux Flex Switch #8 down (15A) -> Tarp Close**
13	Aux/ Digital Output	**Aux Flex Switch #7 up (15A) -> Bed Up**
14	Aux/ Digital Output	**Aux Flex Switch #7 down (15A) -> Bed Down**
15	Digital Output	Park Brake Active
16	Digital Output	Neutral Signal
17	Digital Input	**Body Out of Position Indicator + Road Speed Limit**
18	Digital Input	PTO #1 Request
19	Digital Input	**Programmable Logic Input #1 -> Tarp Open Limit Switch**
20	Digital Input	**Programmable Logic Input #2 -> Tarp Closed Limit Switch**
21	BBCAN H	Body Builder CAN
22	BBCAN L	Body Builder CAN
23	Digital Input	**Programmable Logic Input #3 -> Bed up Limit Switch**
24	Digital Input	**Tailgate Unlock Indicator**
25	Digital Input	**ESC Selector 1 -> Ramp to 1000 RPM when PTO1 active**
26	Digital Output	PTO Active
27	Lighting	Left Turn/Stop (5A)
28	-	-
29	Lighting	Right Turn/Stop (5A)

Advanced Vocational Functionality

Aftermarket programmable features:

- PTO/Engine Speed Control Programmability
- Vehicle Info via CAN and/or Digital Output (Neutral, Vehicle Speed, Powertrain Warning, etc.)
- Chassis/Body request for:
  - Configurable Body Builder Road Speed Limits
  - Suspension Control
  - Gearbox control/inhibition
  - Park brake/service brake application
  - Control of Exterior Lights
- Customizable Driver notifications and Gauges
- Programmable Logic blocks for controlling outputs and logging data:
  - Customizable DTCs for displaying body information (Example: “Support Leg malfunction”)
  - Data logging for reporting or maintenance use (Example: Logged # of Dump bed activation)

PTO Combinations

- Combination of up to 2 PTOs available from factory. Examples:
  - Single Trans PTO + Rear Engine PTO (REPTO)
  - Dual Trans PTO
  - Single Trans + Front Engine PTO (FEPTO)
  - REPTO + FEPTO
  - Trans PTO Prepkit + REPTO
- PTO3 & PTO4 switches available/configurable in aftermarket
- Trans PTO Prep-kit provides Switch, Wiring, Air Solenoid
- Split-shaft PTO functionality available with PTO1 or PTO3

	Transmission Icon	Generic
PTO1	Factory: Momentary AM: Bistable 	Factory: Momentary AM: Bistable 
PTO2	Factory: Momentary AM: Bistable 	Factory: Momentary AM: Bistable 
PTO3	N/A	Momentary Only 
PTO4	N/A	Momentary Only 

*BBM Required

PTO/ESC Programmable Features

- Activation
  - Dash Switch (PTO1-4)
  - Steering Wheel Controls (ESC)
  - Chassis Digital Input*
  - Body Builder CAN*
- Engine Speed Adjustment
  - Steering Wheel Controls
  - Chassis Digital / Analog / Frequency Inputs*
  - Body Builder CAN*
- Preset Engine Speeds
  - PTO Min speed
  - Chassis/BBCAN selectable Speed Modes per PTO*
- Independent Entry/Exit Conditions
  - Vehicle Speed
  - Park Brake/Brake Application
  - Neutral Gear
- Limits
  - Min/Max Engine Speed
  - Vehicle Speed Limits

- Split-Shaft support on PTO1 and PTO3*
- Suspension Kneeling with PTO(s) Active* (ECS Required)
- Automatic Lighting Control when PTO(s) Active
  - Beacon Lamp Activation
  - Hazard Light Activation
  - DRL Deactivation

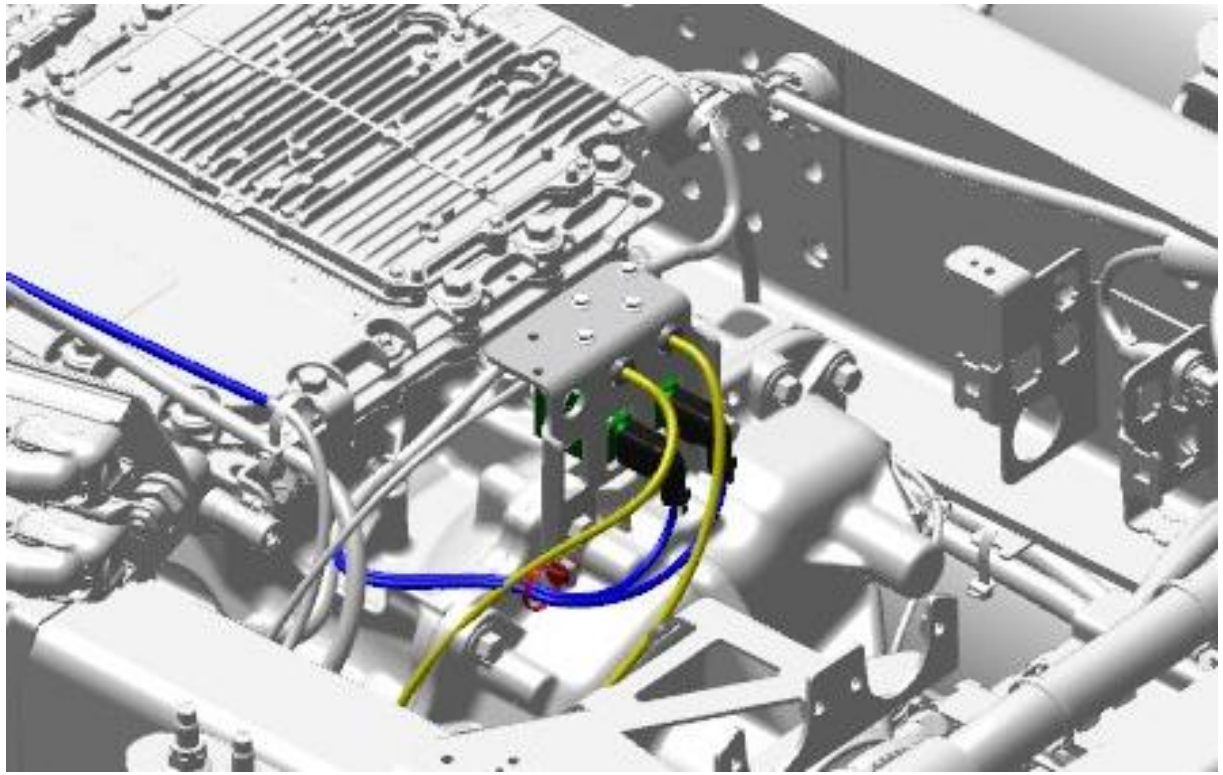

MACK

Body Builder Display Configurability

- Customizable pop-up/ status bar notifications using BBM Inputs / BBCAN
  - Configurable based on input, Park brake, and vehicle speed.
  - Examples Applications:
    - Dump body out of position
    - Crane/ Support Legs out of stow
    - Emergency Stop switch activated
- Customizable gauges for equipment status using BBM Analog sensor inputs/ BBCAN
  - Example applications:
    - Hydraulic fluid temperature
    - Tank Fluid Volume
    - Drum Rotational Speed

Body raised, PB applied, Vehicle speed=0



Body raised, PB released, Vehicle speed=0



Body raised, PB release, Vehicle speed>10kph



MACK

Programmable Logics, Flexible Logging & Diagnostic

- Allows Body Builders create custom logic for:
  - Activating BBM Outputs
  - Custom interlocks for Flex Aux Switch activation/deactivation
  - Triggering BB DTCs and Data Logging Events
- 20 customizable DTCs, triggerable by logic blocks or BB Controllers via BBNet
- BB Logging Types:
  - Event log- 10 separate logs triggered by event
  - Periodic Log- 1 Time stamped data logged based on sampling period
  - Counters- 20 counters recording cumulative data, incremented on trigger
  - Rolling Buffer- Logs data in a predefined time window before/after trigger event
- DTC/Logs sent to back office for fleet/body builder



MACK

Flexible Logging & Diagnostic

Dump Bed Example

Bed vibrator time out on Aux Switch #1, give 10 seconds to cool down. Pop-up to notify driver of cooldown

Body out of position input: Count # times dumped, after 2000, trigger maintenance DTC

Body out of position input: If vehicle speed >12kph for 5 seconds, log information of the event

Hydraulic Oil Temp High: Trigger DTC to notify back office of temp high event

Hydraulic Oil Level Low: Trigger DTC to notify back office of fluid low

PCT (Parameter Configuration Tool)

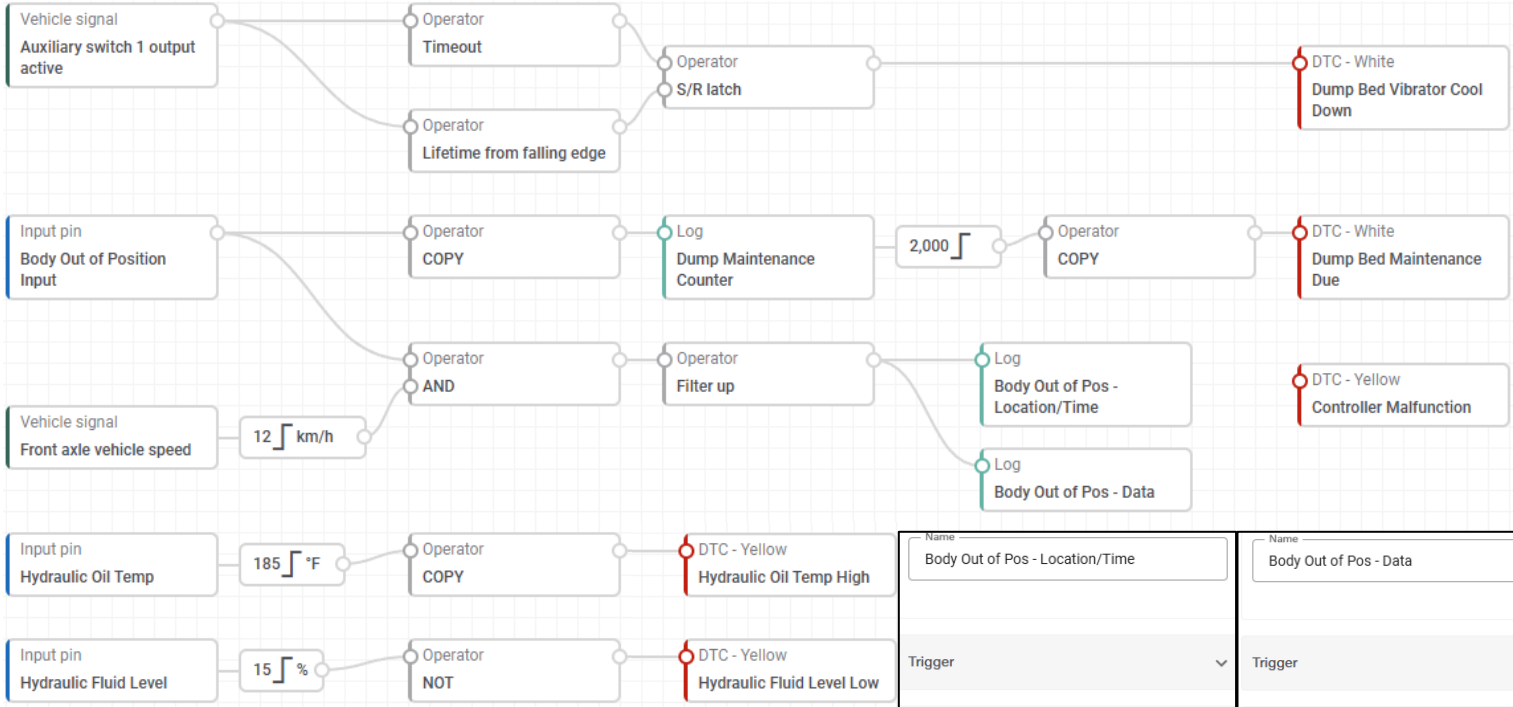

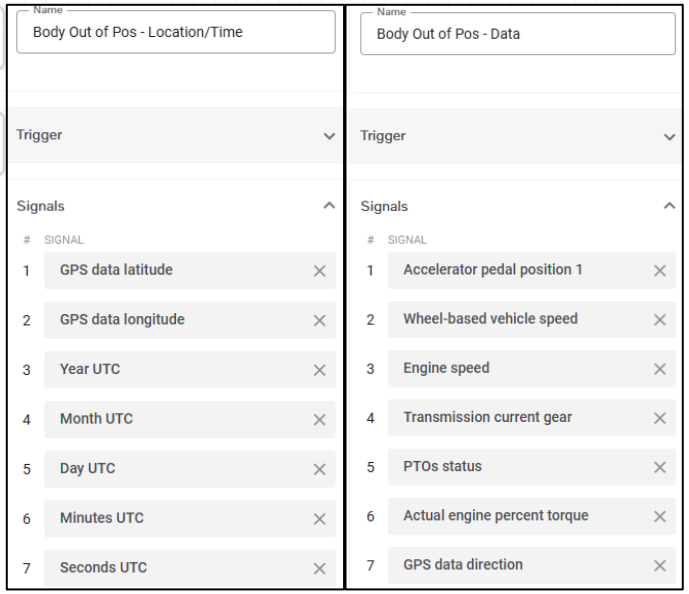

Logged data for Body Out of Position Event

MACK

Tools for programming and configuration

- GDSP/Workshop Toolbox
    - BB Widget
        - Guided Parameter Programming
            - Function based operations for parameter setting (Example PTO1 operation for parameters related to PTO1)
        - Parameter Programming Expert mode
            - Displays AM editable parameters
            - Selectable filters based on Control Unit and Function Group
        - Template Programming
            - Export parameter settings to create a template
            - Templates can be uploaded to multiple chassis for quicker programming
- PCT (Parameter Configuration Tool)
    - Graphical interface used to build Programmable Logics, BB DTCs/ Logs, and configure BBM Pin mapping
    - Ability to create templates for quicker integration across multiple chassis.
    - Chassis configurations are uploaded to central systems, the programmed to the truck using WSTB.

Workshop Toolbox for Body Builder

Access To:

- Configure Flex Switches
- Parameter programming
- PTO setup
- BB connector, pin-out reassignment
- Custom messages to cluster

Purchase via eMedia:

- Available January 2027
- Body Builder - $600 Annual Subscription
- Body Builder Pro -$1,000 Annual Subscription (PCT for parameter logic design)
- Free trial subscriptions



Body Builder Support Contact

- Function.BodyBuilderSupport@macktrucks.com
- Body Builder Support 877-770-7575
- Concrete Pump Support 877-893-3007

Mack Body Builder Manual QR Code


MACK®