KENWORTH

NTEA Commercial Vehicle Upfitting Summit

October 14th, 2026



KENWORTH

Agenda

- Kenworth Overview
- Powertrain Updates
- Technology Updates
- Chassis Updates
- ADAS Updates
- Kenworth Engineering/ Applications Support



KENWORTH



HEAVY DUTY



VOCATIONAL



ELECTRIC VEHICLES



MEDIUM DUTY

North American Kenworth Plants



Chillicothe, OH



Sainte-Therese, QC



Mexicali, MX



Renton, WA

North American Designed and Built!



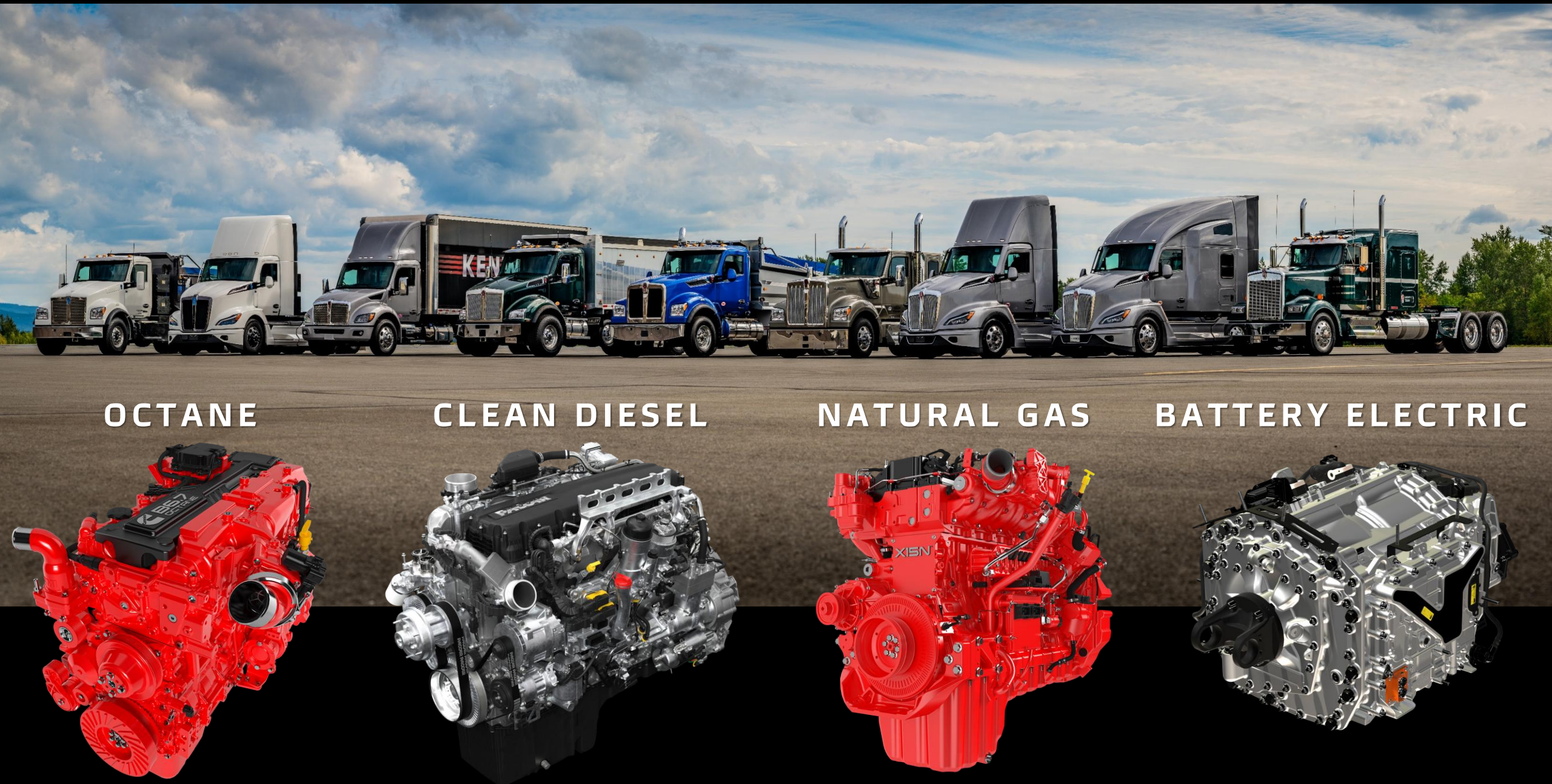
OCTANE
CLEAN DIESEL
NATURAL GAS
BATTERY ELECTRIC
X15N

A TRUCK AND A POWERTRAIN FOR EVERY JOB











Kenworth Technology Updates

Alexis Cinco

Product Planning Manager





THE FUTURE OF TRUCKING

Connectivity Platform

Game-Changing Interior

PACCAR CONNECT

Real Productivity Gains

Driver-Focused Functionality

PACCAR Connect Functionality

Core Functions

- 15” Display
- HVAC Controls
- Radio/Media
- Phone Pairing (Bluetooth)
- Apple CarPlay
- Programmable Camera Views
- “Hey Kenworth!” Voice Assistant

Core Kenworth Apps

- KW Operator Manuals
- KW Driver Academy
- Dealer Locator
- Vehicle Health



Camera Input

Features

- 4 Inputs for Analog Cameras (NTSC/PAL)
- Set Automatic Triggers for Camera View

Part Numbers

- PP807032 – Front Camera With 16 Ft Cable
- PP804395 – Rear Camera With 70 Ft Cable
- PP804396 – Side Camera With 16 Ft Cable
- PP804397 – Side Camera With 16 Ft Cable



Wireless Charger

Cord Free Charging

- Ergonomic Location Next to Steering Wheel
- Identifies Other Objects to Prevent Activation
- Phone Held Firmly in Place

Standard for 2027

- T680
- T880/T880S
- W990



Digital Vision Mirrors



Rear View Camera

Night Vision – Infrared Lens

Look Down Camera (RH Side Only)

Interior View



Driver Side Monitor – 12.3”

Passenger Side Monitor – 15”

System Details

Door Control Module

- Adjust Camera Position
- Adjust Mirror Position
- Toggle Between Left/Right, Camera/Mirror



System Vision Settings

Vision Enhancements

- Automatic Trailer Tracking
- Infrared Night Vision
- Clear Vision in Inclement Weather

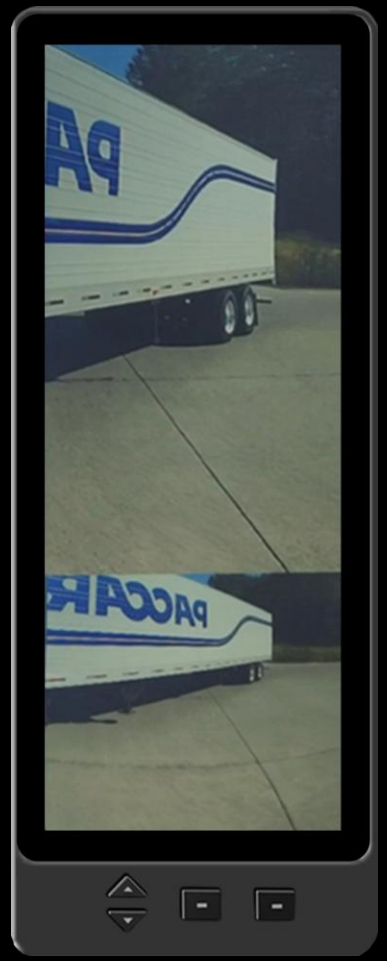

Trailer



Night



Weather

Inclement Weather





7” Panasonic Display – Navigation, CarPlay, Cameras

7” Infotainment System
- Navigation
- Apple CarPlay
- Sirius XM
- Bluetooth Connection

Camera Integration
- Aftermarket Kit Plugs Directly into Unit
- Supports Up to Four Camera Displays
- Available Through Kenworth Dealer Locations





QR Code

- PACCAR Connect Feedback Form:

Chassis Updates

Roman Woods
Medium Duty Marketing Manager




T880

T880 Configurations

- Maximized Visibility
- 15-inch Digital Display
- Optimized Cooling Performance
- 5-piece Hood With Bolt-on Fenders
- Fender Closeouts And Extensions
- All Metal Grille And Surround
- Optional Pre-cleaner
- Available In Sleeper Configurations
- Factory Installed Options For Easy Upfitting

T880
MX OPTIMIZED HOOD
SET-BACK FRONT AXLE

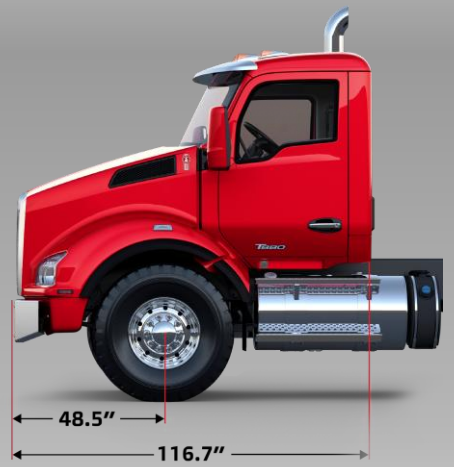

T880
STANDARD HOOD
SET-BACK FRONT AXLE

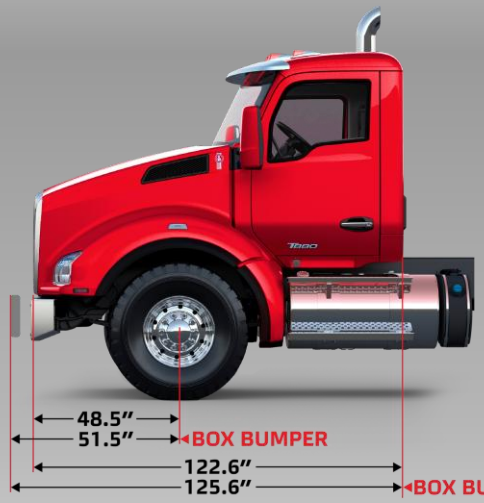

T880S
MX OPTIMIZED HOOD
SET-FORWARD FRONT AXLE

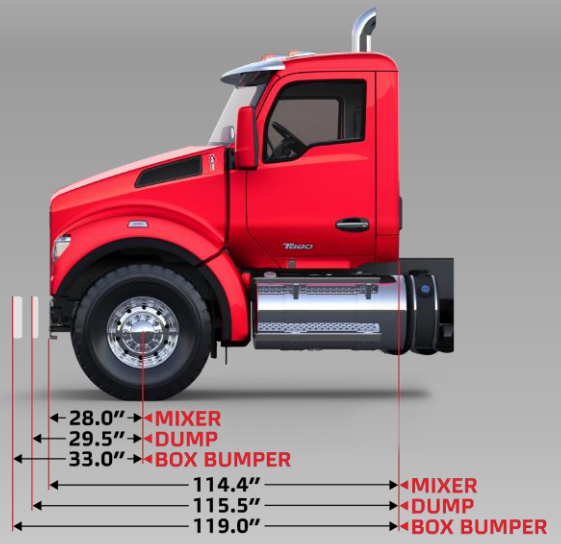

T880S
PERFORMANCE HOOD
SET-FORWARD FRONT AXLE

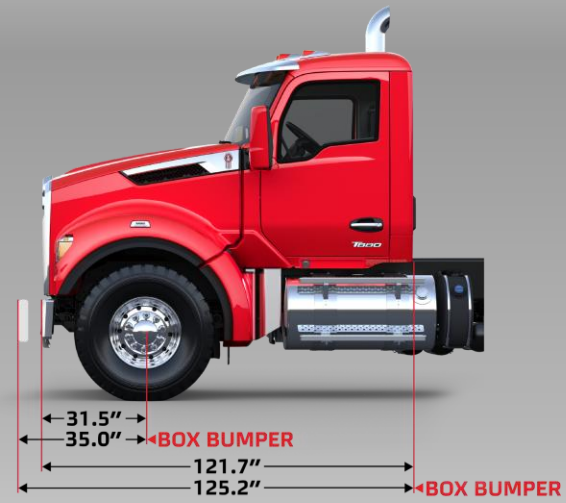

Installation Made Easy

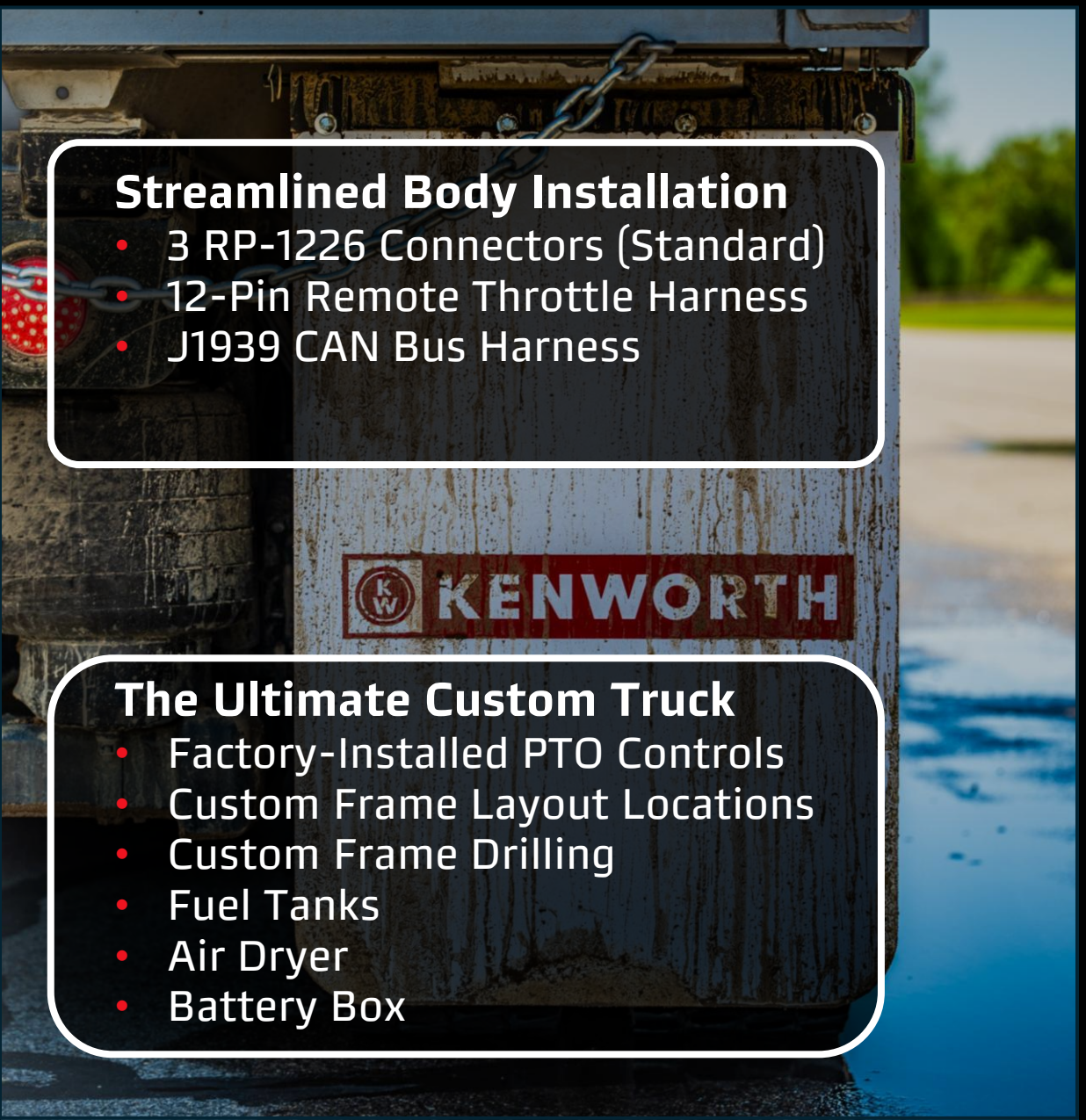

Streamlined Body Installation

- 3 RP-1226 Connectors (Standard)
- 12-Pin Remote Throttle Harness
- J1939 CAN Bus Harness

The Ultimate Custom Truck

- Factory-Installed PTO Controls
- Custom Frame Layout Locations
- Custom Frame Drilling
- Fuel Tanks
- Air Dryer
- Battery Box







Heavy Duty New Interior



Charcoal

Titanium



T880/T880S Hardpoints

Features

- Robust Front Frame Structure
- Alternative to Extended Frame Rails
- Factory Installed, Reduces Body Upfit Time
- Equipment May Attach Directly to Implement Plate

- Available Now for Set-forward Front Axle
- SOP Q1 2027 for Set-back Front Axle



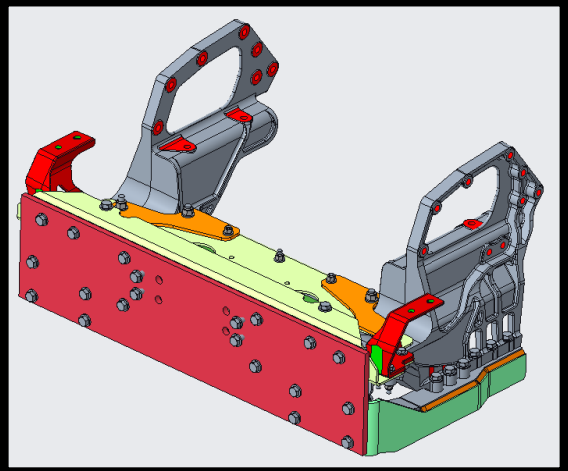

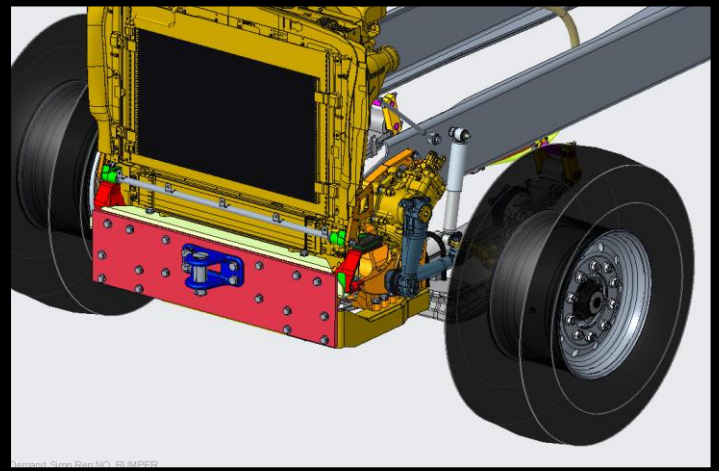

RAM Mounts

- Multiple Factory Options
  - Side of Dash – Including Ball Mount with Wiring Pass-through
  - Front of Dash – Mounting Plates with Wiring Pass-through
- Streamline Installation of Equipment

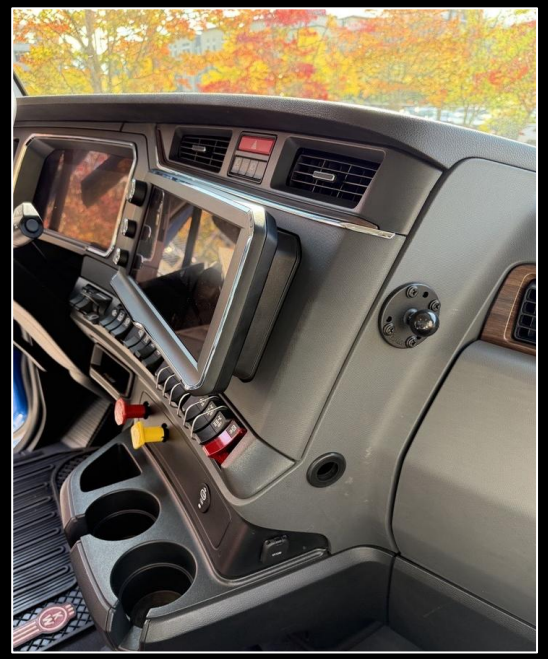




T480 T380 T280 T180

Medium Duty Configurations

- Maximized Visibility
- 7-inch Digital Display
- Hydraulic and Air Brake Options
- Fender Extensions
- All Metal Grille And Surround
- Two Roof Height Options
- 3-person Cab Capacity
- Factory Installed Options For Easy Upfitting

T180/T280/T380/T480
Short Aero Hood

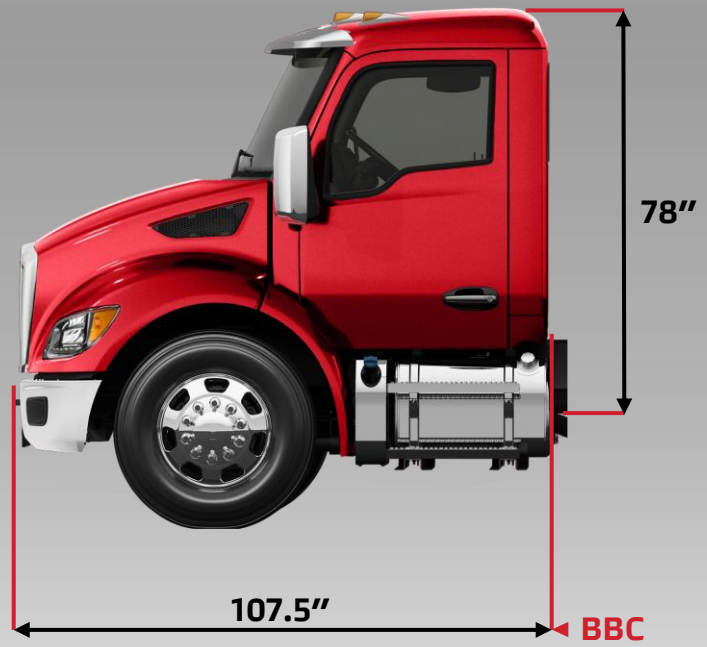

T180/T280/T380/T480
Medium Aero Hood

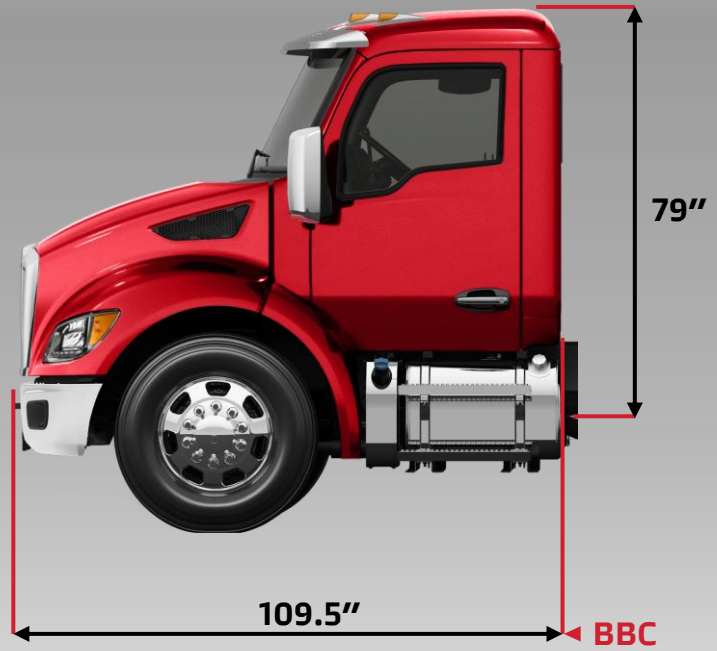

T280V/T380V/T480V
Vocational Hood

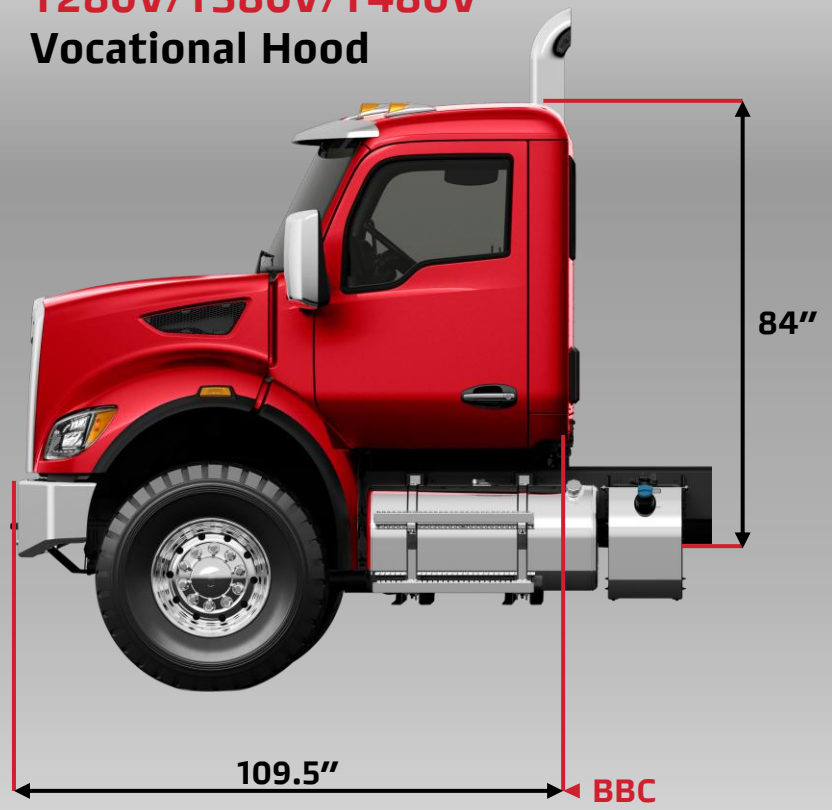

Medium Duty LED Headlamps



- Brighter Output
- Increased Distance
- Internal Heating Element
- Easy to Retrofit
- Standard on Medium Duty in 2027

Cummins B6.7O Engine

- Diesel-like Performance & Durability
- Automotive-like Familiarity
- Ease of Ownership
- Alternative to Natural Gas and Diesel
- Certified to EPA2027, CARB Low NOx
- Reach New Kenworth Customers



Octane Fuel Tank

- Single Mounting Option
  - Behind Rear Axle
  - Between Frame Rails
- Minimum Frame Rail Required Based on Configuration
  - Fuel Tank Size
  - Rear Suspension

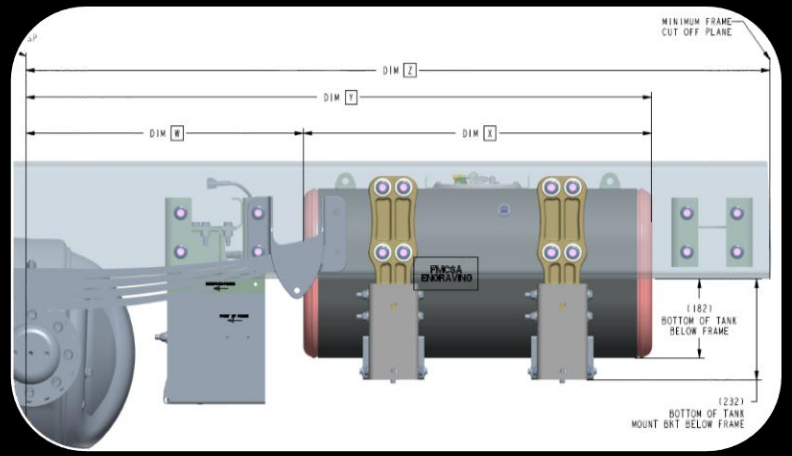





ADAS Updates

Chris Demas

Product Planning Manager



Driver Assistance Systems



- Fusion 3.0 Expansion
- Enhanced Side Object Detection
- Electronic Park Brake

Driver Assistance Systems



- Fusion 3.0 Expansion
- Enhanced Side Object Detection
- Electronic Park Brake

Bendix Fusion 3.0 Expansion

Features

- Improved Adaptive Cruise Control
- Wider Radar Range
- Pedestrian Emergency Braking
- High Beam Assist
- Full Color Camera
- Radar Compatible with All Bumpers Including Center Tow Hook

Expansion Timing

- T680 – Available
- T880/T880S – Available
  - Manual or Allision – Jan. 2027
- W990 – Available
  - Manual or Allision – Jan. 2027
- Medium Duty – Jan. 2027
- L770 – Jan. 2027

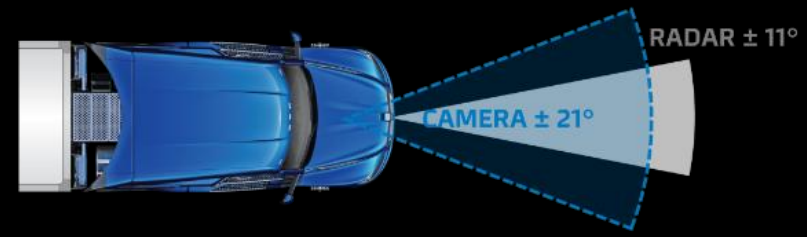

Fusion 2.2

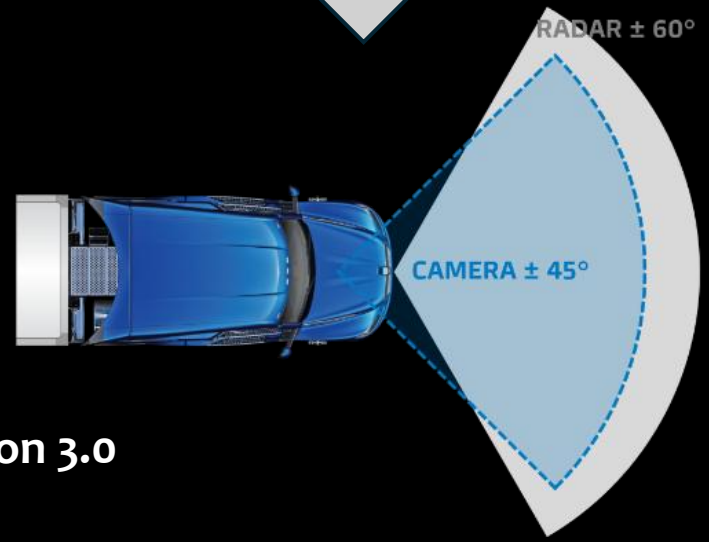

Fusion 3.0

Bendix Fusion 3.0 Expansion – Mounting

Windshield Camera Mount

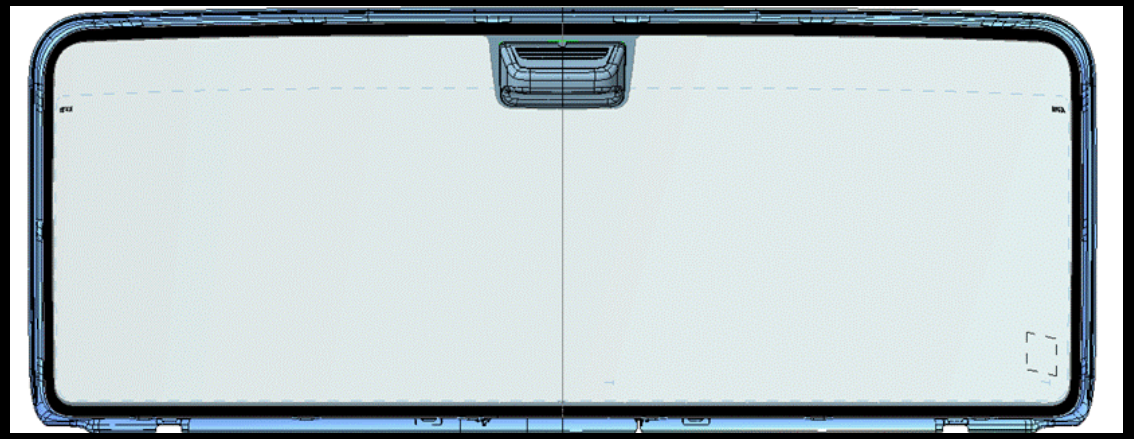



Medium Duty Front Radar

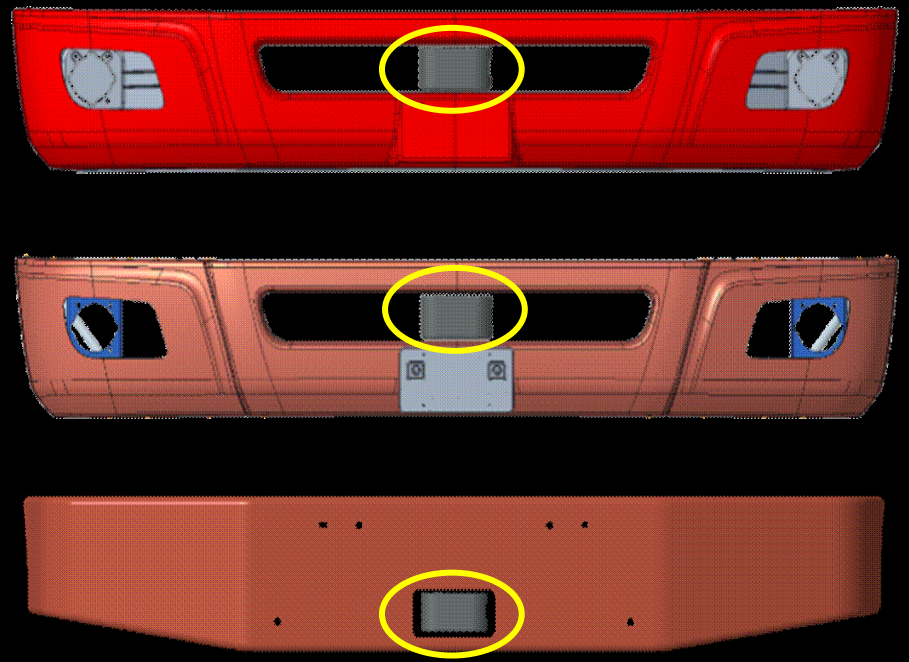

Heavy Duty Front Radar



Bendix Fusion 3.0 Expansion – Center Tow Hooks

Medium Duty

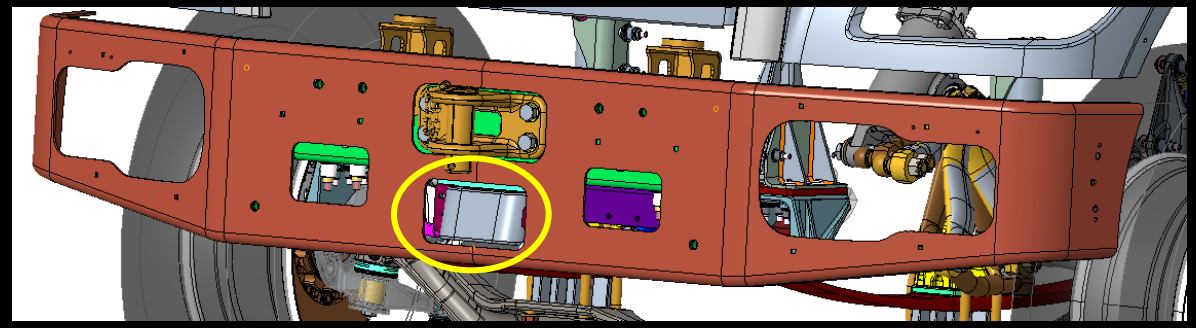

Heavy Duty



Driver Assistance Systems



- Fusion 3.0 Expansion
- Enhanced Side Object Detection
- Electronic Park Brake

Enhanced Side Object Detection

Previous System

- Narrow Field of View
- Right Hand Only

Enhanced System

- Available on All Models
- 180 Degree Field of View
- Available on Both Sides or RH Only
- Pedestrian/Cyclist Detection
- Multiple Mounting Options

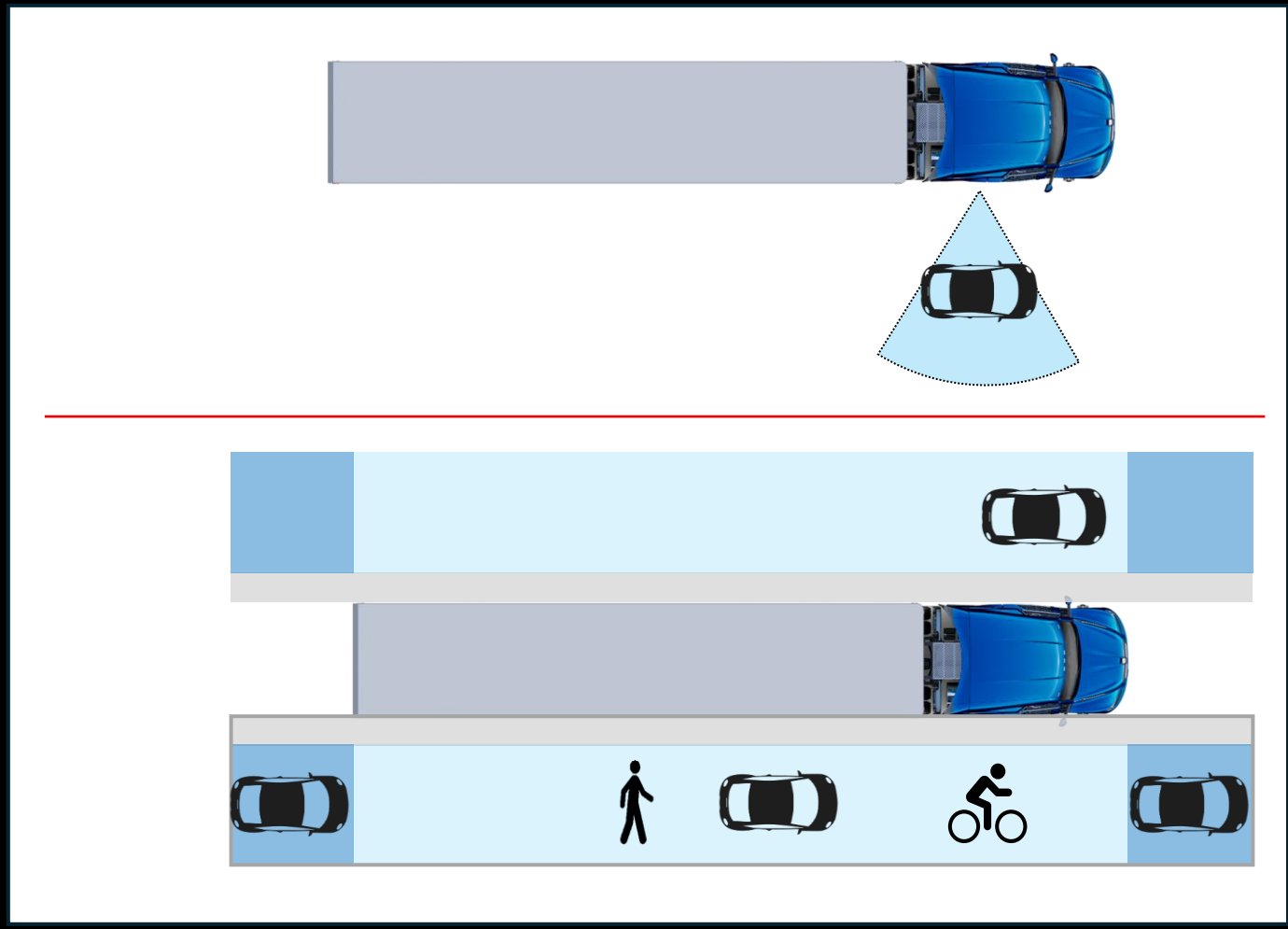

Enhanced Side Object Detection

Notifications
- *"Inform"* – Visual Only
- *"Warn"* – Visual + Audio
- Adjustable Brightness & Volume
- Visual Outputs on Digital Display





Expanded Functionality
- Low Speed Detection
  - Operates 0-18.6 mph
  - Vulnerable Road User Detection
- High Speed Detection
  - Operates 0-85 mph



Radar Mounting Options

Conventional Non-Aero
Example: KW T880

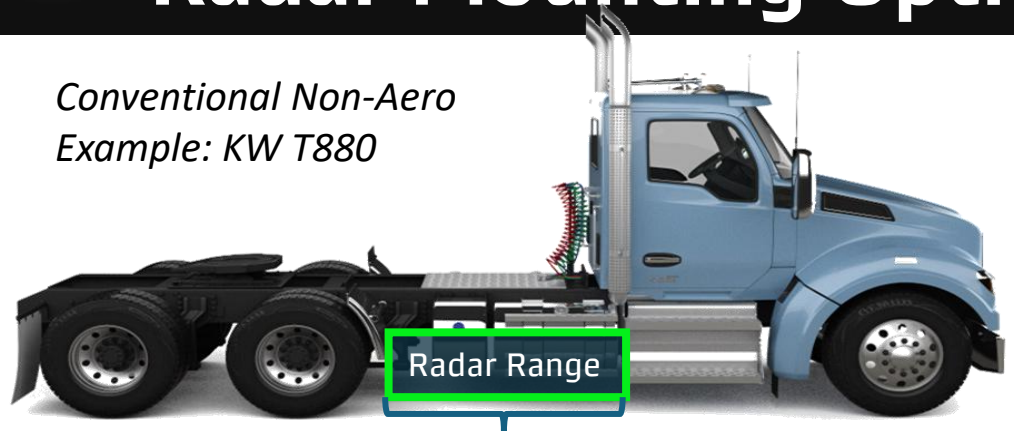

3-6m From Front of Bumper

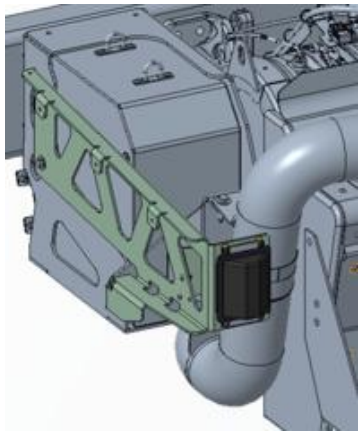

HCU (RH)

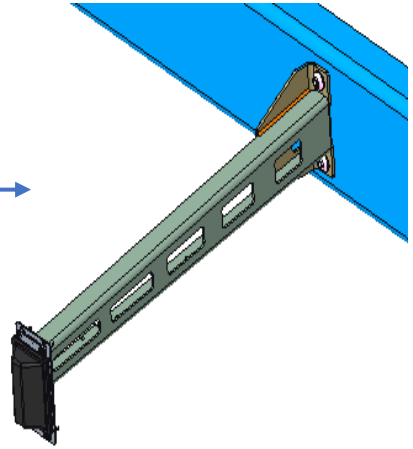

Frame Mount

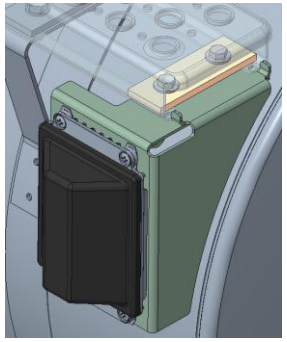

F/T Step



F/T Strap

LNG (Liquid Natural Gas)
Example: KW T680 LNG

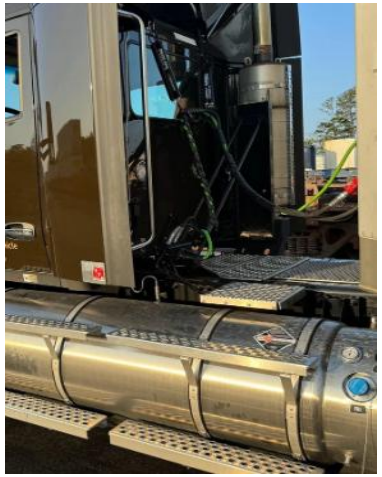

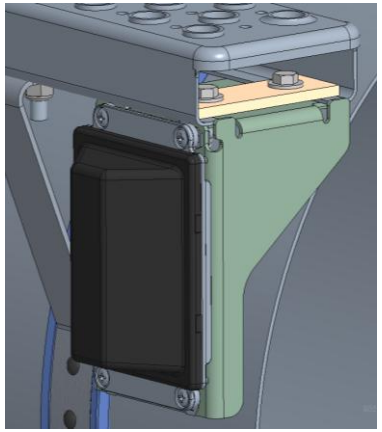

LNG Tank Step

KW L770



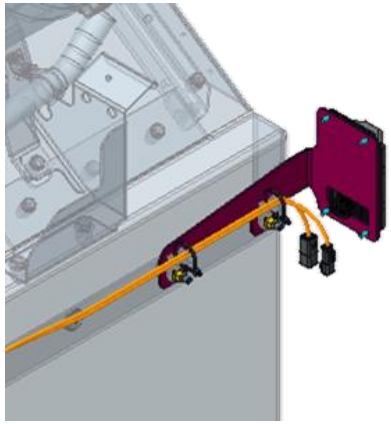

Mudflap Bracket

Driver Assistance Systems



- Fusion 3.0 Expansion
- Enhanced Side Object Detection
- Electronic Park Brake

Electronic Parking Brake

Electronic Control Unit
- LED Status Lights Indicate Brakes are Engaged
- Interlocks Programmed to Mitigate Rollaways

Features
- Automatic Park Brake Engagement Based on Conditions
- Easy Engagement and Disengagement
- Automatic Trailer Detection
- Dash Override Switch

Standard for 2027
- T680, W990, T880, T280 – T480
- Diesel and Octane Engines





Dash Electronic Control Unit (DECU)



Park Valve Module (PVM)

Dash Override Switch

Operator Flexibility

- Provides Opportunity to Open Door/Remove Seatbelt
- Ability to Maneuver with Door Open or Seatbelt Off (Jobsites, Backing, etc.)
- Option to Delete Switch

Activating Override Switch

- While In Gear, Flip Dash Switch
- Warning Appears on Digital Display
- Ability to Bypass Certain Interlocks
- Flip Dash Switch Off to Re-engage
- Will Auto Engage If Conditions Met





Applications Engineering

Brad Timmons

Senior Sales / Applications Engineer



Resources

- **Body Builder Manual**
  - https://www.kenworth.com/resources/truck-resources/
  - Dimensions
  - Body Mounting and Frame Modifications
  - CAN Communications and Electrical
  - PTO
  - Aftertreatment and Exhaust Configurations
  - Routings
- **Your Kenworth Dealer Is The First Point Of Contact**
- **You Can Also Contact Your District Service Manager Directly**
- **Contact With The Applications Engineering Team Can Be Coordinated By Your Kenworth Dealer Or DSM**

3D Models

- A 3D File Of The Chassis Layout Can Be Requested By Specifying Sales Code 6390088
  - No Changes Allowed Unless The Custom Frame Layout Option Is Also Specified
- Applications Engineering Can Add a Bumper, Hood, Cab, and Front Wheel Ends At No Additional Charge Upon Request
  - The Default File Format Is STP
  - A Chassis Number Is Required
  - A Signed NDA With PACCAR Is Required
  - Unable To Provide Non-PACCAR Proprietary Supplier Content (Engines, Transmissions, Axles, Suspension, Etc.)

3D Models



On Display Today



T280

Cummins B6.7O Octane
Rear Mounted Fuel Tank
7” Navigation Display
LED Headlamps
Electronic Park Brake



T880S

Performance Hood
Cummins X15 (Next Gen)
2027 Emissions
PACCAR Connect Display
Wireless Phone Charger
Electronic Park Brake

KENWORTH

Thank You for Your Attention

Come See Us in Kilimanjaro – Suite 1

