FORD PRO™ UPDATE

2026 Commercial Vehicle Upfitting Summit

TODD McCHESNEY

Program Manager

Commercial Vehicles

TODD McCHESNEY

WHAT'S NEW FOR 2026

COMMERCIAL VEHICLES

Product Launches (January 2026)

- 26MY F53/F59 Stripped Chassis in production
- 27MY E-Series & Medium Duty in production

Key Program Updates

- F53/F59 Stripped Chassis
  - Definitive agreement signed with Blue Bird (Aug. 2026)
  - Ford ends production @ DCP (Dec. 2026)
- Medium Duty 6.7L Diesel
  - Sales began in Green States (Aug 2026)
  - Extended to 28MY





TODD McCHESNEY

2028MY UPDATE MEDIUM DUTY

COMMERCIAL VEHICLES

Order Bank Opened

- October 13th

Production Starts

- January 2027

Product Updates – Gas Only

- Upgrade 6R140 to 10R140 transmission (6 to 10 speed)
- Two additional catalytic converters - VIN engraving offered as option on both as theft-deterrent option (Order Code: 62B)
- Forward model CAD will be made available via BBAS help desk



TODD McCHESNEY

2028MY UPDATE E-SERIES

COMMERCIAL VEHICLES

Order Bank Opens

- October 20th

Production Start

- January 2027

Product Updates – Gas Only

- Upgrade 6R140 to 10R140 transmission (6 to 10 speed)
- Two additional catalytic converters - VIN engraving offered as option on both as theft-deterrent option (Order Code: 62B)
- Forward model CAD will be made available via BBAS help desk



TODD McCHESNEY

NEW CATALYTIC CONVERTERS

COMMERCIAL VEHICLES

Medium Duty

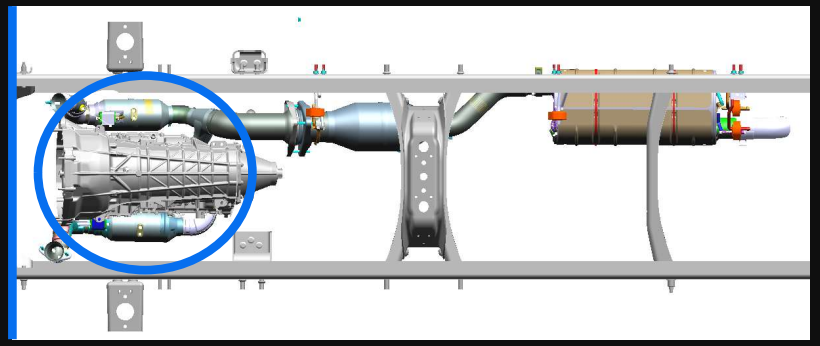

E-Series

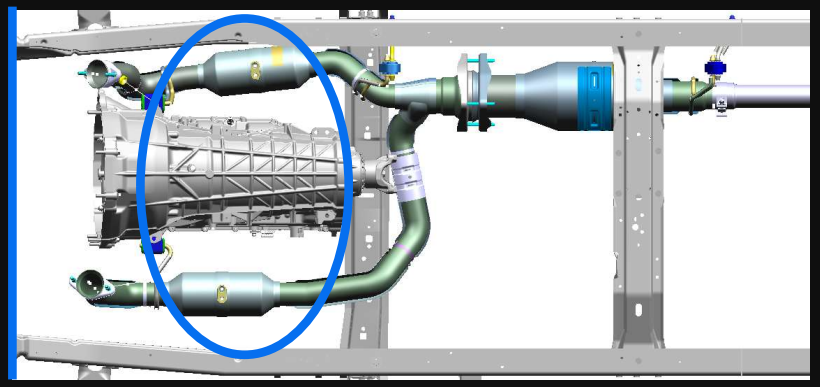



VIN Stamping

TODD McCHESNEY

2028MY TRANSMISSION UPGRADE (6 TO 10-SPEED)

COMMERCIAL VEHICLES

MY27 E-Series
6R140 transmission/driveline coupling

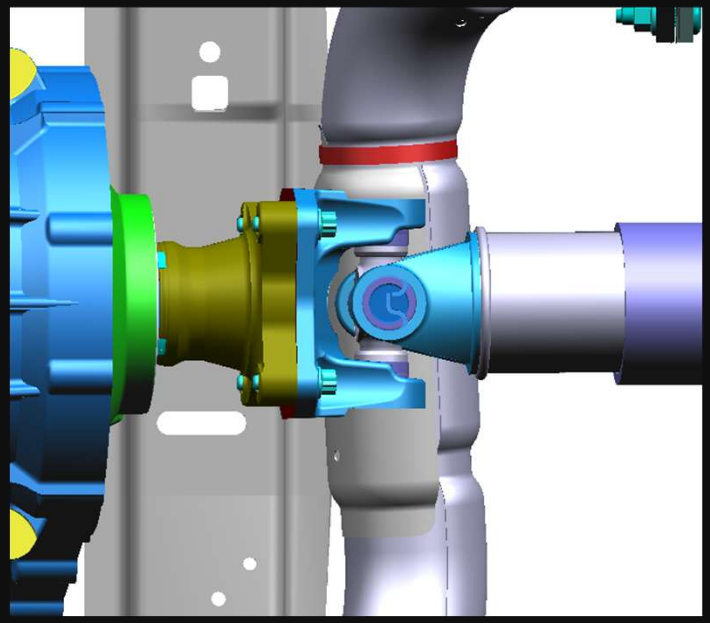

MY28 E-Series
New 10R140 transmission/driveline coupling

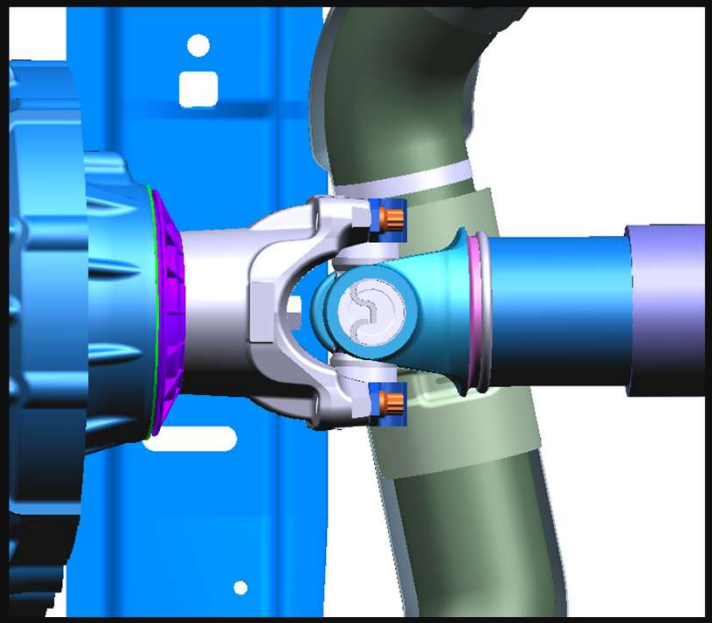

JAY DE VENY

Chief Program Engineer

Ford Transit® North America

Ford Transit®

2026 WORK TRUCK COMMERCIAL VAN OF THE YEAR™

3RD YEAR STRAIGHT



JAY DE VENY

WHAT'S NEW FOR 2027MY TRANSIT®

1

Safety & Compliance

- FMVSS 208 seat belt reminder enhancement
- Enhanced front-row reminders
- Rear-row reminder functionality added
- Software implementation through Cluster or Phoenix Domain Control

2

Electrical & Quality

- Major low-voltage Electrical Distribution System (EDS) complexity refinement and wiring TVM actions
- Wiring robustness improvements using Z-eyelet fasteners
- Approximately 30 product improvements addressed, predominantly wiring related

3

Product & Sourcing

- Hankook tire implementation for vans; Continental continues at approximately 40%
- Transit nameplate badge elimination with molded logo/cladding
- Tire Mobility Kit delete and software-license rationalization
- No powertrain lineup change

JAY DE VENY

UPFITTER IMPACT AND 2027MY TIMING

What CVUS attendees need to know and what has moved out of 2027MY

Upfitter Discussion Points

1 Wiring Interfaces	Confirm connector, harness and grounding impacts before upfit release.
2 Seat Belt Reminders	Validate rear-seat configurations and completion-vehicle implications.
3 Tire Sourcing	Use the correct tire and loading data for the as-built vehicle.
4 Body Identification	Account for molded Transit® logo / cladding change in graphics and trim planning.

Timing reference: 27MY J1 / MP1 July 28, 2026; 27MY J2 J1 / MP1 April 5, 2027.

MOVED TO 28MY

R1234yf Refrigerant Transition

The latest program summary states the refrigerant action moved from 27MY to 28MY.

MOVED TO 28MY

Single Passenger Airbag

The new single passenger airbag was deferred from 27MY Job 1 to 28MY Job 1.

JAY DE VENY

27MY TRANSIT® PASSENGER VAN

Upgraded All-Season Tire



16” Silver Steel Wheel with Black Hubcap

(Standard on Standard Front Axle configurations)



16” Silver Steel Wheel with Silver Hubcaps and Exposed Lug Nuts (641)

(Standard on Heavy-Duty Front Axle configurations)



16” Steel Wheel with Full Silver Wheel Cover (64H)

(Standard on E-Transit)



- **Select steel wheel options**
- **Standard & 64G**

DAVE MORELLO

Super Duty® Program Management Supervisor

DAVE MORELLO

F-SERIES® LEADERSHIP

Increased position in 2025 with sales of

828,832 UNITS

Up **8.3%** from 2024

Sales YTD (through September)

561,508 UNITS

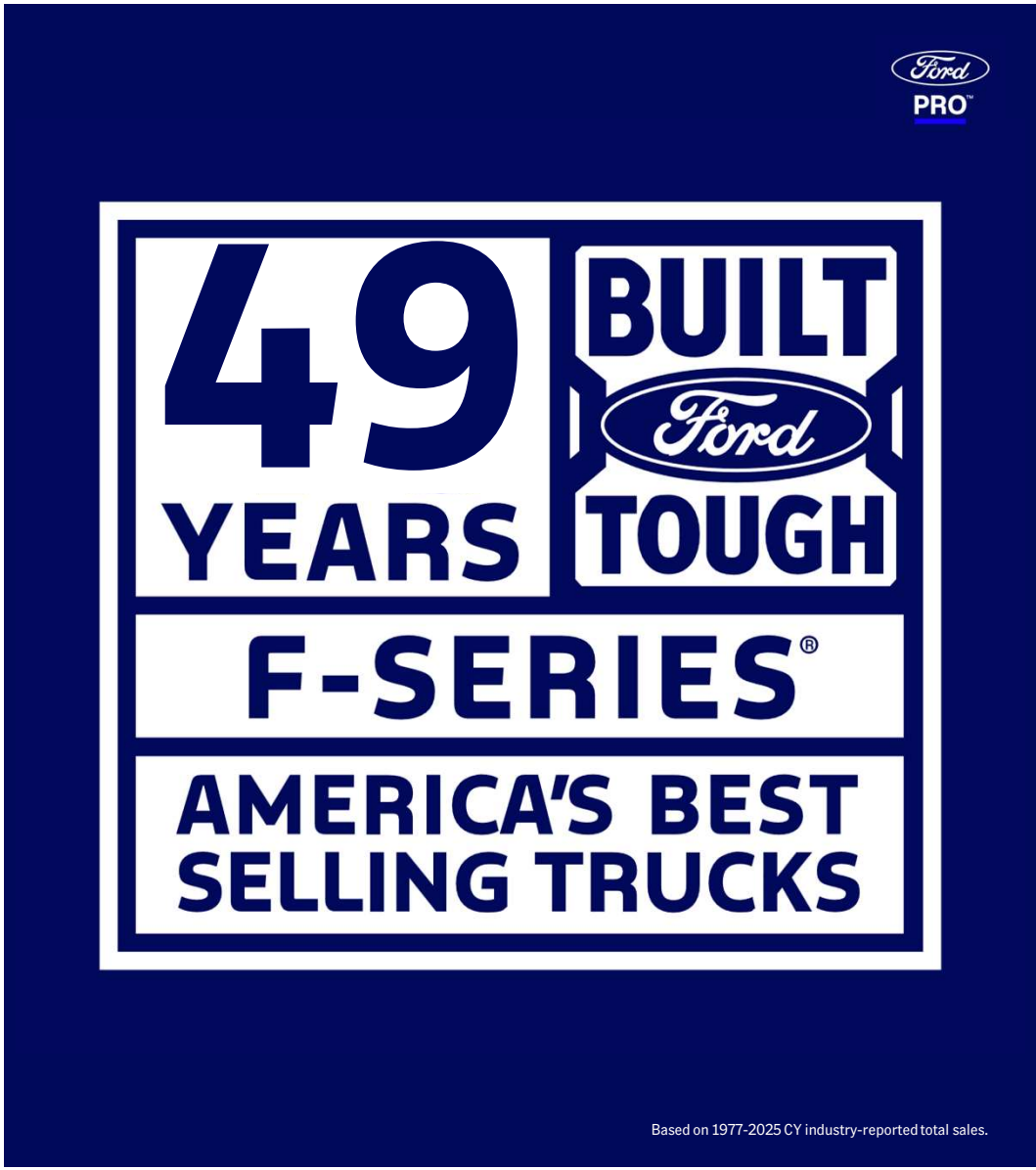

DAVE MORELLO

2026 SUPER DUTY®

For the Second Year Straight, the Ford Super Duty is Named America's #1 Heavy-Duty Truck for New-Vehicle Quality in 2026 by J.D. Power.



HIGHEST INITIAL QUALITY

"It represents the relentless dedication our teams have to our Customers and endless hours they've poured into designing, engineering and building Super Duty pickups and chassis cabs to be the ultimate BUILT FORD TOUGH® tool for work and recreation."

– Andrew Kernahan
Vehicle Programs Director, Heavy Duty Truck and Platforms

*For JD Power 2026 U.S. Initial Quality Study award information, visit jdpower.com/awards. Awards based on 2025 & 2026 model years.



Always consult the Owner's Manual before off-road driving, know your terrain and trail difficulty, and use appropriate safety gear. 2026 Ford Super Duty F-250 Lariat model with optional equipment and extra-cost color option shown.

DAVE MORELLO

2027 SUPER DUTY®

Production Started July 2026

- Kentucky Truck Plant and Ohio Assembly Plant Production Underway
- Oakville Assembly Complex Becomes Third Manufacturing Site, Creating 1,800 Jobs in Oakville, Ontario

What's New for 2027

- Exterior Color Changes: Neptune Blue Added; Iconic Silver Returns
- Introducing Super Duty® Carhartt® Package on XLT Crew Cab Pick-Ups
- Tremor® Expands onto STX & 175.5" Wheelbase Pick-Ups, XLT and Above
- Introducing Platinum Crew Cab Chassis Cab
- XL Off-Road Package with 35" Tires
- Introducing SuperCab™ Rear Seat Delete Option on F-250 Box Delete and XL Chassis Cab
- High-Output Diesel Becomes Standard on Pick-Up
- New AC Compressor with Engine Front Cover Changes
- Strobe Lights No Longer Offered as OEM Equipment



2027 Ford Super Duty Chassis Cab Platinum model with aftermarket equipment and extra-cost color option shown.

DAVE MORELLO

2027 SUPER DUTY® | POWERTRAIN LINEUP

2027 PICKUP
(F-250® / F-350® / F-450®)

Engine	Transmission
Standard (F-250 / F-350) 7.3L 2V Gas DEVCT PFI NA V8	TorqShift® Ten-Speed Automatic w/SelectShift®
Standard (F-450) 6.7L High Output Power Stroke® V8 Turbo Diesel B20	

2027 CHASSIS CAB
(F-350® / F-450® / F-550® / F-600®)

Engine	Transmission
Standard 7.3L 2V Gas DEVCT NA PFI V8	TorqShift® Ten-Speed Automatic w/SelectShift®
Available 6.7L 4V OHV Power Stroke® V8 Turbo Diesel B20	

DAVE MORELLO

2027 SUPER DUTY®

BEST-IN-CLASS TOWING
Max available Towing of 40,000 lbs[1]

BEST-IN-CLASS PAYLOAD
Max available Payload of 7,900 lbs[2]

BEST-IN-CLASS GAS HORSEPOWER
Max available 420 Horsepower and 445 lb-ft of Torque[3,4]

[1]Max gooseneck tow rating of 40,000 lbs available on F-450® XL Regular Cab 4x2 DRWwith available 6.7L High Output Power Stroke® V8 Turbo Diesel B20 engine. Class is Full-Size Pickups over 8,500 lbs GVWR. Based on current publicly available competitive information. When properly equipped. Requires F-450 High-Capacity Gooseneck Tow Package. Max towing varies based on cargo, vehicle configuration, accessories, and number of passengers.

[2]Max. payload of 7,900 lbs. available on F-350® XL model Regular Cab 4X2 DRW with Gas Heavy-Duty Payload Package and 7.3L 2V DEVCT NA PFI V8 gas engine. Max payload varies and is based on accessories and vehicle configuration. See label on doorjamb for carrying capacity of a specific vehicle. Always properly secure cargo. Class is Full-Size Pickups over 8,500 lbs. GVWR. Based on current publicly available competitive information.

[3]Max. 420 horsepower and 445 lb.-ft. of torque based on 7.3L V8 gas engine. Class is Full-Size Pickups over 8,500 lbs. GVWR. Horsepower and torque ratings based on testing requirements prescribed in SAE J1349® standard. Your results may vary. When properly equipped. Horsepower and torque are independent attributes and may not be achieved simultaneously.

[4]When properly equipped. Horsepower and torque are independent attributes and may not be achieved simultaneously.





JOHN RIEGER

Upfit & Modified Sales Manager

JOHN RIEGER

FORD PRO™ UPFITTER (FPU) PROGRAM AT A GLANCE

Ford Pro's Quality & Process Qualification Program for Commercial Vehicle Upfitters

WHAT

Recognize upfitters that meet Ford Pro's Quality & Process Standards.

WHY

Required to:

- Maintain Converter Pool / Ship-Thru accounts
- Win government bids
- Be eligible for Ford Pro Upfitter Rewards
- Appear on Ford Pro Find an Upfitter Site

HOW

Self-assess every location, pass an on-site review, sign, and submit VinView and Work Truck Certification (WTC) data ongoing for 95% of VINs upfit.

PATH TO QUALIFICATION

1. Apply
2. Welcome into Program (if eligible)
3. Self-Assessment(s) (all locations) and VinView & WTC Data Submissions Begin
4. FPU Review
5. On-Site Visit And Execute Contract
6. Qualification

Eligibility: 150+ Ford vehicles upfitted per year · Commercial Vehicle upfitters only (not Modified Retail)

JOHN RIEGER

FPU PROGRAM STATUS

Where upfitters stand in the qualification program today

125	56	20
Total Qualified	**Total In Process**	**Total Withdrew / Failed**
Upfitters meeting Ford Pro standards	Working through qualification steps	Exited or did not meet standards

200 Upfitters Engaged in the Program to Date

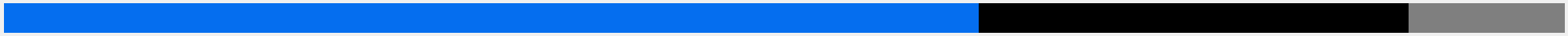

Qualified 63% · In Process 27% · Withdrew / Failed 10%

JOHN RIEGER

FORD PRO QUALIFIED UPFITTERS



JOHN RIEGER

NEW WEB TOOLS

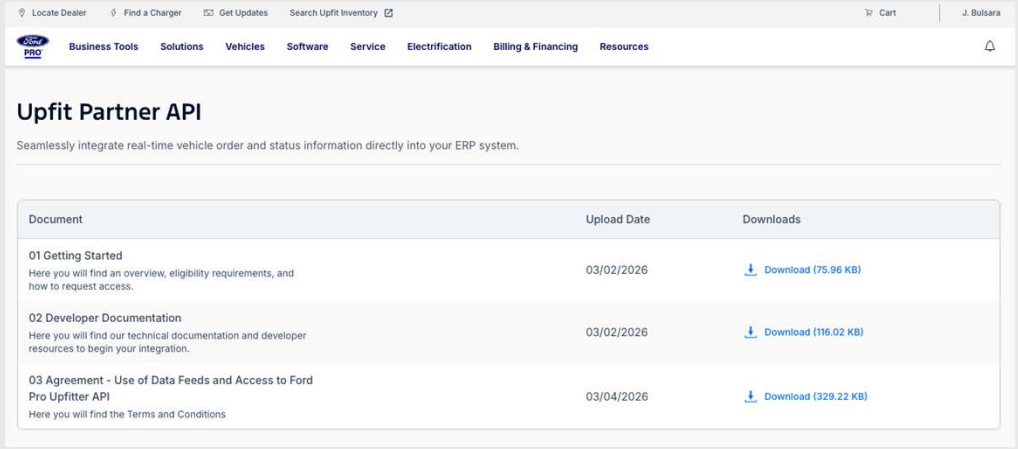

Upfitter

New upfitter API for Ford Pro™ Upfitters allows for seamless integration with ERP/MRP systems

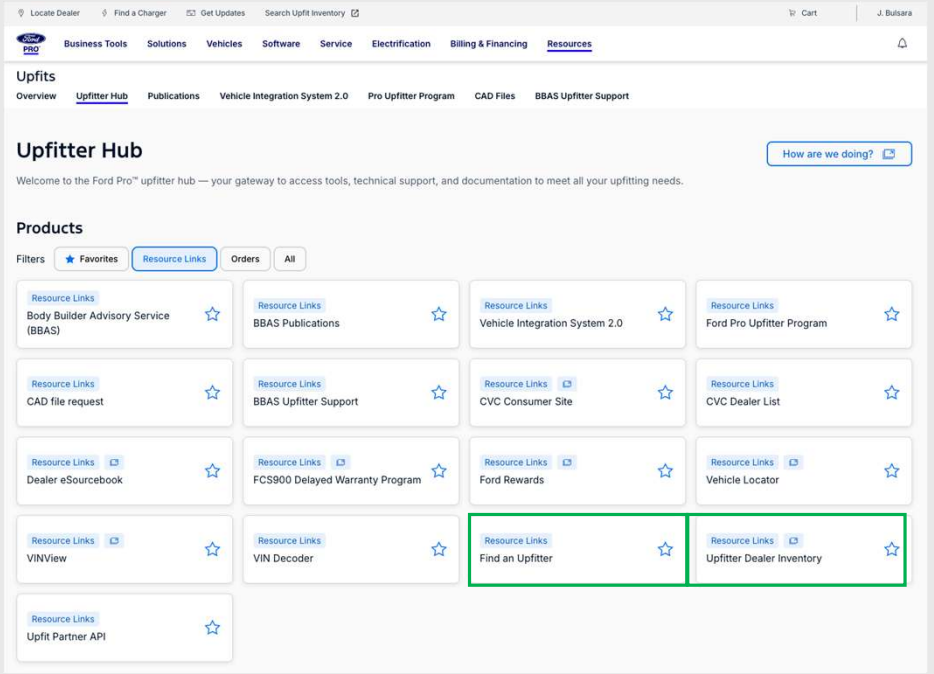

Upfitter Hub is not another Website –
It is a Resource! FordPro.com

JOHN RIEGER

WORK TRUCK SOLUTIONS WEBSITE

New Tier 1 commercial vehicle site with

100,000 vehicles

in inventory!

locatefordworktrucks.com

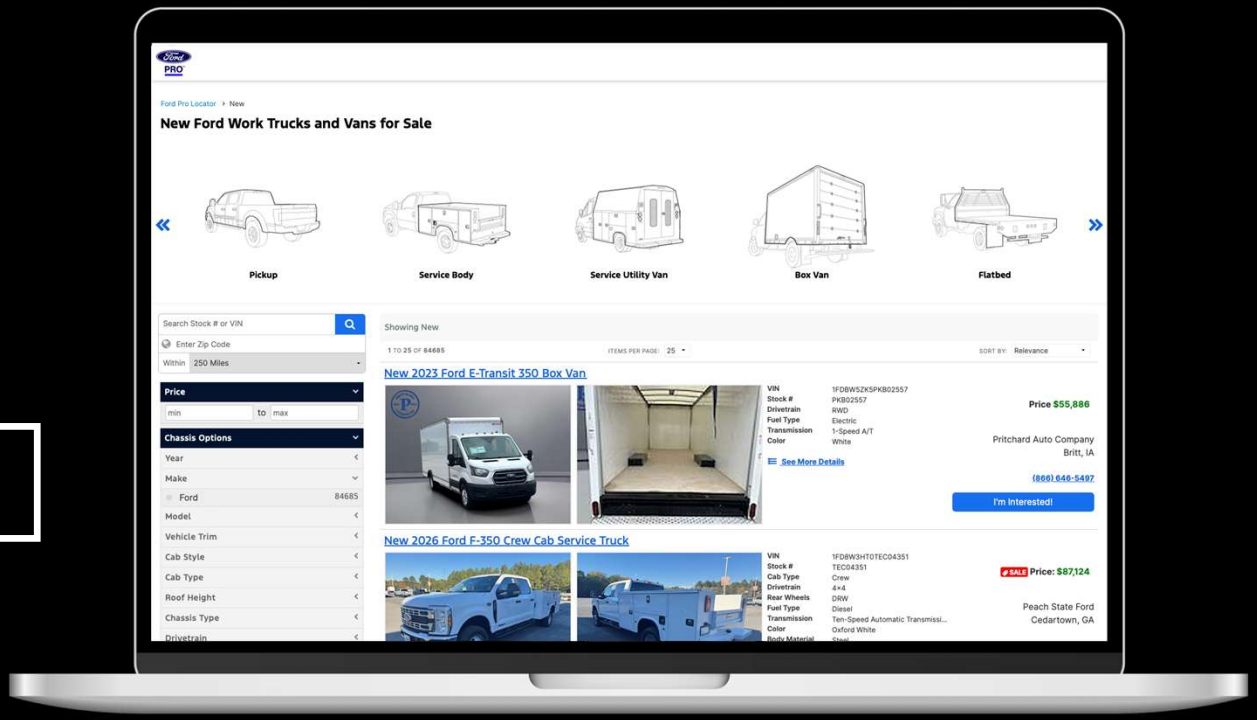

VEHICLE INTEGRATION SYSTEM 2.0

JOHN RIEGER

AVAILABLE VEHICLE INTEGRATION SYSTEM 2.0

Allows upfitters to integrate equipment through programmed logic instead of spliced harnesses and aftermarket modules – helping **improve** day-to-day **operational efficiency**

A Factory-Built Integration Point
Build control logic to drive hard switches, soft buttons, and custom in-cab warnings from real vehicle CAN signals.

Protect the Crew and Equipment
Vehicle Motion Inhibit blocks shift from Park until the upfit is safe to move; Upfitter Idle keeps equipment powered indefinitely while the operator leaves the vehicle and locks the truck.

Transit® 26MY
Control upfit equipment using the new 12-inch center display, making 2026 Transit® van the most upfit-friendly Transit ever



Optional and after market equipment shown.

JOHN RIEGER

VEHICLE INTEGRATION SYSTEM 2.0 OFFERING STRATEGY

	 **Super Duty® Pickup** Order Code 18J	 **Super Duty® Chassis Cab** Order Code 18J	 **Police Interceptor® Utility**	 **F-150® Police Responder®**	 **Transit® Cargo & Passenger Van** Order Code 55A	 **Transit® Chassis Cab & Cutaway** Order Code 55A
2027 MY	●	●	●	●	●	●
2026 MY	●	●	●	●	●	●
2025 MY	●	●	●	●	○	○
2024 MY	●	●	●	●	○	○
2023 MY	●	●	○	○	○	○

● Standard ● Optional ○ Unavailable

JOHN RIEGER

NEW FORD PRO™ CLOUD-BASED LOGIC EDITOR

Fast. Simple. Always Up to Date.

100% Web-Based Configuration Editor
- No installs. No updates to manage. Access from anywhere

Seconds, Not Minutes
- Faster login. Faster project load. Smoother block movement

Modern, Cleaner Interface
- Easier editing. Better Experience

Same Drag-and-Drop Logic
- Nothing new to learn, just faster and more responsive

Automatic Updates
- New features delivered seamlessly with no action required

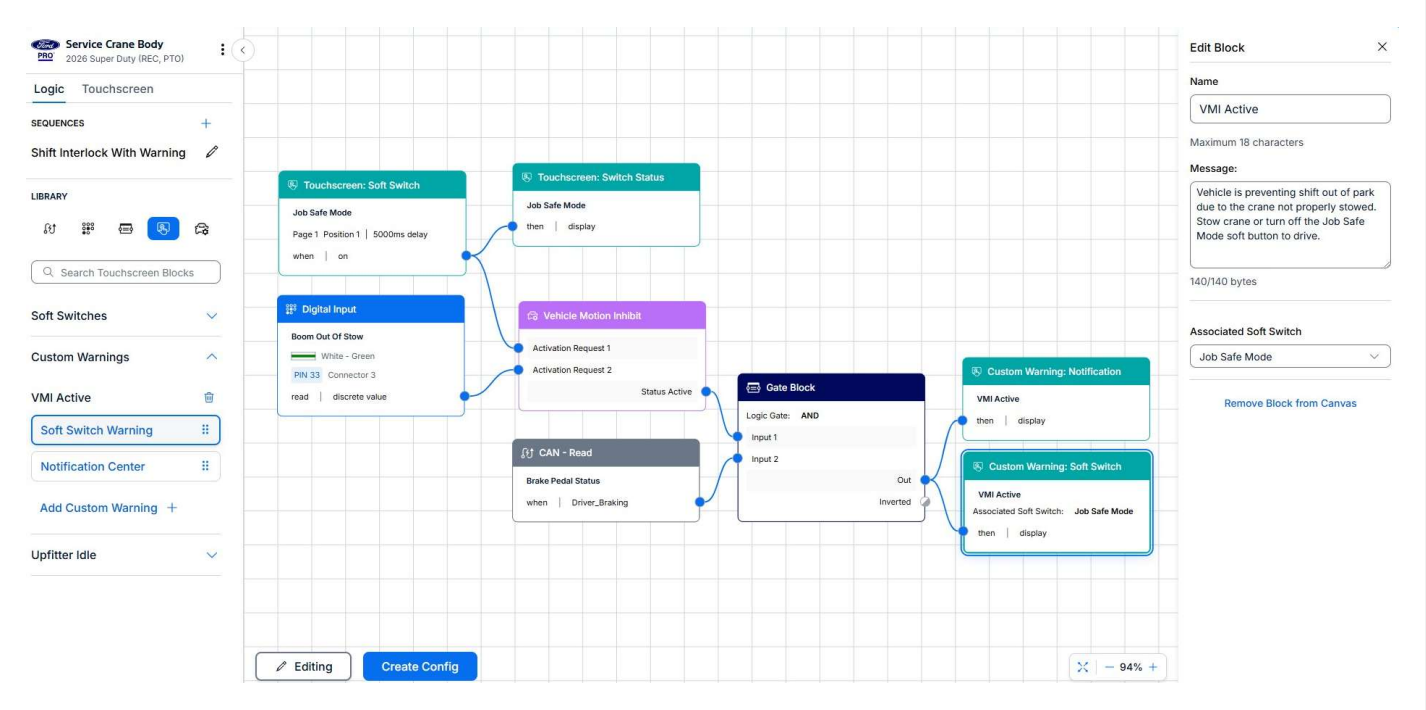

JOHN RIEGER

2026MY SUPER DUTY®

Order Code 18J – Reference SVE Bulletin Q-379R1



Remote Engine Control

- Remotely switch engine on or off with digital inputs
- Constant Electric Park brake signal with engine off
- No power interruption during engine off – upfitter switch outputs remain powered



Remote Power Take Off (PTO) / SEIC Modes

- 5 different modes (Battery Charge Protect, Fixed Speed (Stationary Elevated Idle), Variable Speed, Mobile Mode, Split Shaft)
- Configured through the Logic Editor - removes any resistors in the harness.
- Option for traditional signal input (wired) or soft switch control (SYNC® screen interface)



Sub-Compartment Lock / Unlock

- Lock and unlock the power locking compartments on the second unit body to with the vehicle's key fob
- Reduces the number of key fobs the operator would carry and the # of button presses required to ensure cargo is locked and secured
- Corrected behavior: Stable state when vehicle sleeps

DEAN ATOVSKI

Supervisor

Body Builder Advisory Service

DEAN ATOVSKI

GENERAL BODY BUILDER LAYOUT BOOK (BBLB) UPDATES

LOW-VOLTAGE (12V) BATTERY CARE & STORAGE POLICY

- **Upfitter SoC Responsibility & Warranty Rejections**
  - Maintaining State-of-Charge (SoC) during storage and upfit is strictly the upfitter's responsibility.
  - Ford **will not reimburse** 12V battery replacements caused by discharge below 12.4V.
  - Battery warranty claims submitted **>14 days after vehicle receipt** and prior to retail sale will be rejected.
- **Tightened 14-Day Maintenance Interval**
  - Vehicles in storage for more than 14 days require an active maintenance charger or mandatory bi-weekly voltage checks and recharging.
- **Testing & Cold-Weather Charging Protocols**
  - If a battery falls below 12.4V, its health must be evaluated using an approved diagnostic tester (e.g., Midtronics DCA-8000).
  - In cold climates, vehicles may require warming above 41° (5° C) effective recharge.
- **Strict Pre-Delivery Mandate**
  - A vehicle with a battery state of charge less than 12.4V must never be delivered to an end customer.



DEAN ATOVSKI

GENERAL BODY BUILDER LAYOUT BOOK (BBLB) UPDATES

HIGH-VOLTAGE (HV) SYSTEMS, DISCONNECT & SUB SHIELDING

- **Authorized Interfaces & ePTO Integration**
  - Modifications to HV circuits are strictly prohibited; interface only via 12V systems, Pro Power Onboard outlets, or approved ePTO provisions.
- **Mandatory Second Unit Body (SUB) Shielding**
  - If the SUB does not fully protect the top of the HV battery from debris or severe service conditions, a protective shield must be installed.
  - The shield must maintain a minimum clearance of 10 mm to the battery enclosure under maximum anticipated load deflection.
- **HV Component Removal & Temp Limits**
  - Paint curing exceeding 140° (60° C) or longer than 45 minutes requires removal of the HV battery pack per Motorcraft service procedures.
- **Electrified Platform Storage Rules**
  - Disconnecting the 12V battery is mandatory (previously recommended) when storing HEV, PHEV, or BEV units for more than 30 days.

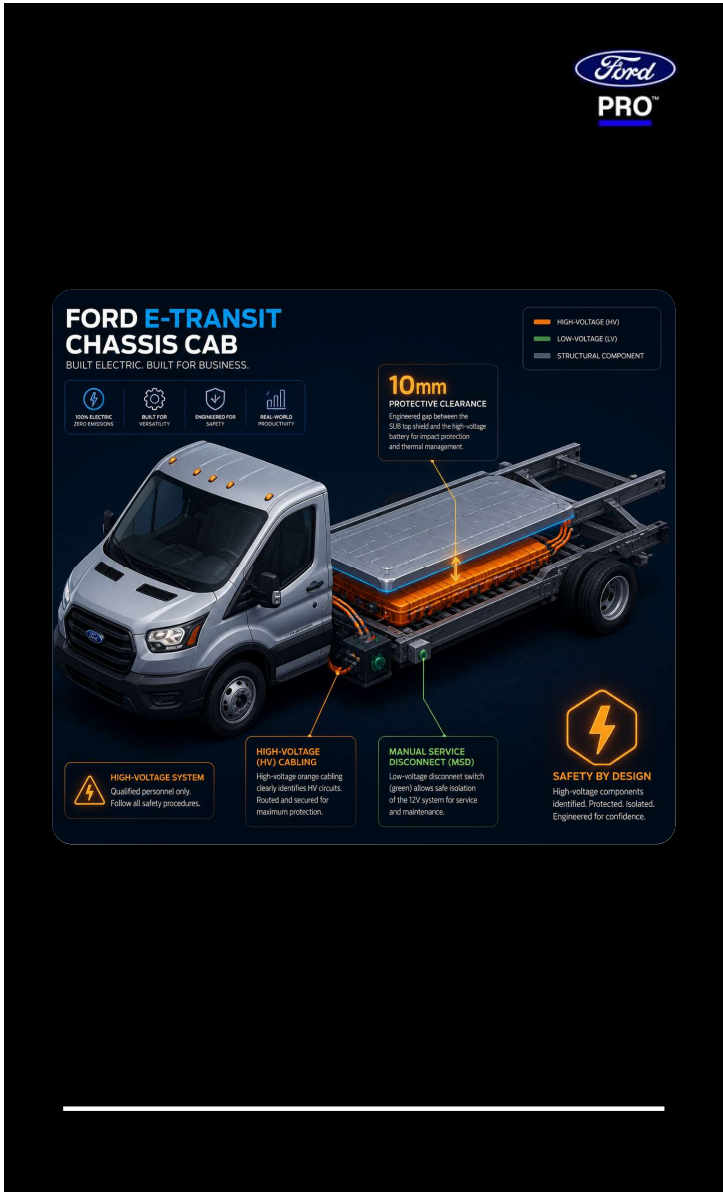

DEAN ATOVSKI

GENERAL BODY BUILDER LAYOUT BOOK (BBLB) UPDATES

LOW-VOLTAGE WIRING, GROUNDING & PHYSICAL RETENTION

- **Dedicated Frame & SUB Grounding Standards**
  - Factory OEM ground studs must never be altered, relocated, or piggybacked.
  - Installed bodies (SUB) require at least two independent ground paths connected directly to the chassis frame.
- **Terminal Connections & Fastener Rules**
  - Fastening to power studs is limited to a maximum of two like-sized eyelets per stud.
  - Anti-rotation eyelets are required to maintain harness clearances and routing integrity.
  - All electrical joints must be verified with a calibrated torque wrench.
- **Clearance Requirements & Fluid Line Isolation**
  - Minimum physical clearances: 10 mm to static surfaces, 38 mm to engine parts, 76 mm to moving components, and 231 mm to exhaust heat sources.
  - Wiring must never be attached to or routed in contact with fuel, brake, or coolant lines.
  - Drip loops are mandatory at terminal entries to prevent moisture migration.

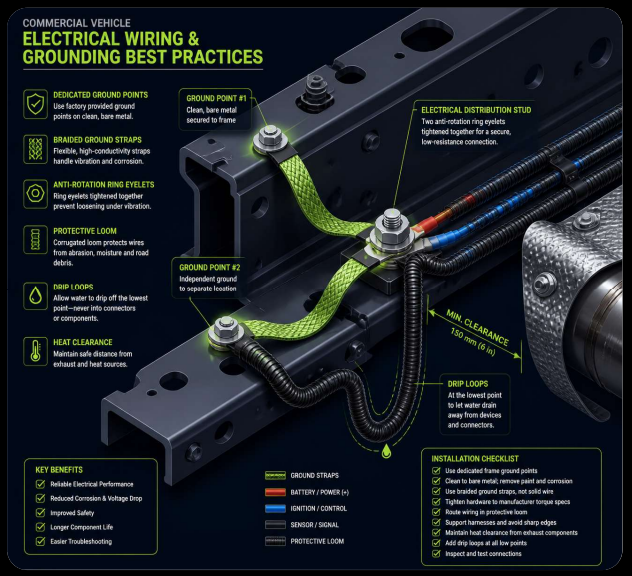

DEAN ATOVSKI

GENERAL BODY BUILDER LAYOUT BOOK (BBLB) UPDATES

VEHICLE INTEGRATION SYSTEM 2.0 ARCHITECTURE

- **J1939 Protocol & Cloud Logic Editor**
  - Control logic is configured via the cloud-based Ford Pro Upfit Logic Editor utilizing standard SAE J1939 protocol.
- **Approved CAN Access & Retrofit Support**
  - Vehicle Integration System 2.0 is the only approved method for tapping vehicle CAN signals.
  - Vehicle Integration System 2.0 can now be retrofitted in the field post-factory on supported vehicle lines.
  - Accessing configuration files and logic schemas requires an active Fleet Identification Number (FIN Code) on the Ford Pro portal.

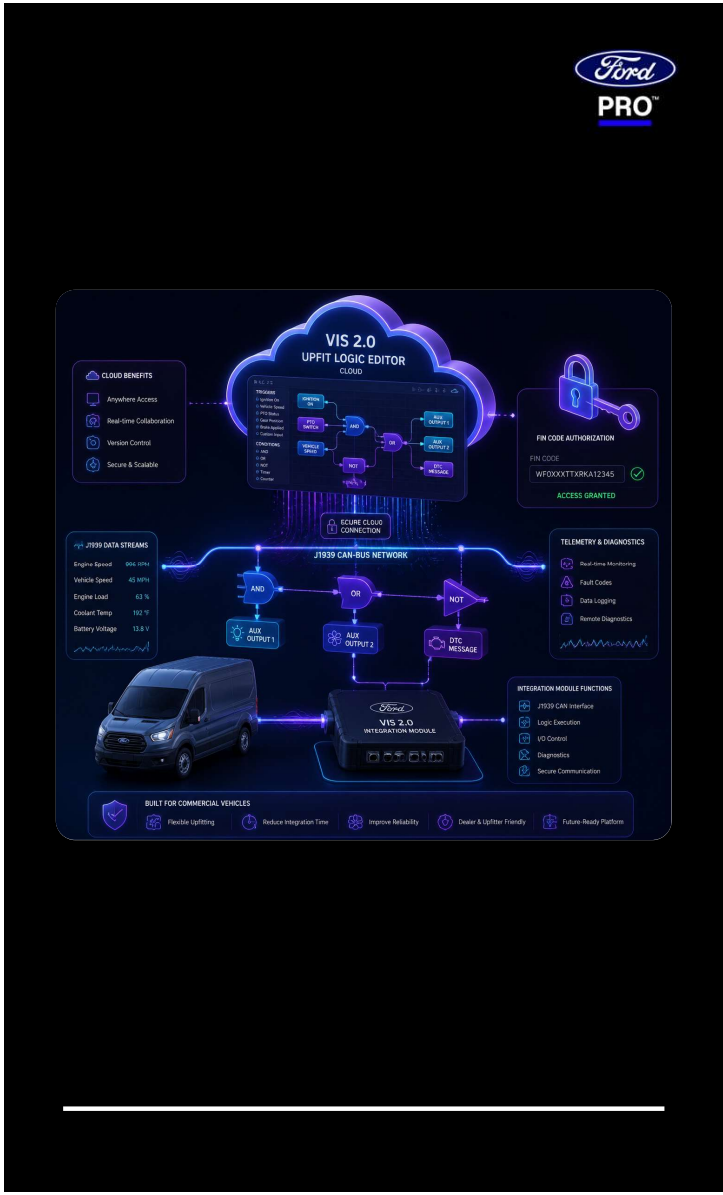

DEAN ATOVSKI

SUPER DUTY® 2027MY

REAR SEAT DELETE (OPTION CODE: 90W)

SUPER CAB **ONLY**

PICKUP			XL				XLT				LARIAT®			
			F-250®	F-350® SRW	F-350® DRW	F-450®	F-250	F-350 SRW	F-350 DRW	F-450	F-250	F-350 SRW	F-350 DRW	F-450
		Order Code	600A	610A	620A	670A	603A	613A	623A	673A	608A	618A	628A	678A
	KEY INTERIOR OPTIONS (Continued)													
	*Rear Seat Delete - Optional on F-250; Req. Pickup Box Delete (66D) on F-250; NA w/ Rear Defrost (43B), STX Appearance Pkg (17S) or Pro Power Onboard™ — 2 KW (43K)	90W	0-2				—				—			

DEAN ATOVSKI

SUPER DUTY® 2027MY

REAR SEAT DELETE (OPTION CODE: 90W)

SUPER CAB **ONLY**

CHASSIS CAB			XL					XLT					LARIAT®				PLATINUM			
			F-350® SRW	F-350® DRW	F-450®	F-550®	F-600®	F-350 SRW	F-350 DRW	F-450	F-550	F-600	F-350 SRW	F-350 DRW	F-450	F-550	F-350 SRW	F-350 DRW	F-450	F-550
		Order Code	630A	640A	650A	660A	680A	633A	643A	653A	663A	683A	638A	648A	658A	668A	733A	743A	753A	763A
	KEY INTERIOR OPTIONS (continued)																			
	* Rear Seat Delete - Super Cab Only; NA w/ Pro Power Onboard™ — 2 kW (43k) or XL Chrome Package (96V)	90W	0-2					—					—				—			

DEAN ATOVSKI

E-SERIES 2028MY

AUXILIARY HEATER –

AIR CON. CONNECTOR PACKAGE (57L) CHANGES

- AC Line Connection Ports have been revised from Threaded Connection to Metal Seal Fittings (3/8” and 5/8” MSF)
- Auxiliary Heater and AC Line Minor Routing Line Changes
- CAD Available via BBAS Helpdesk Request

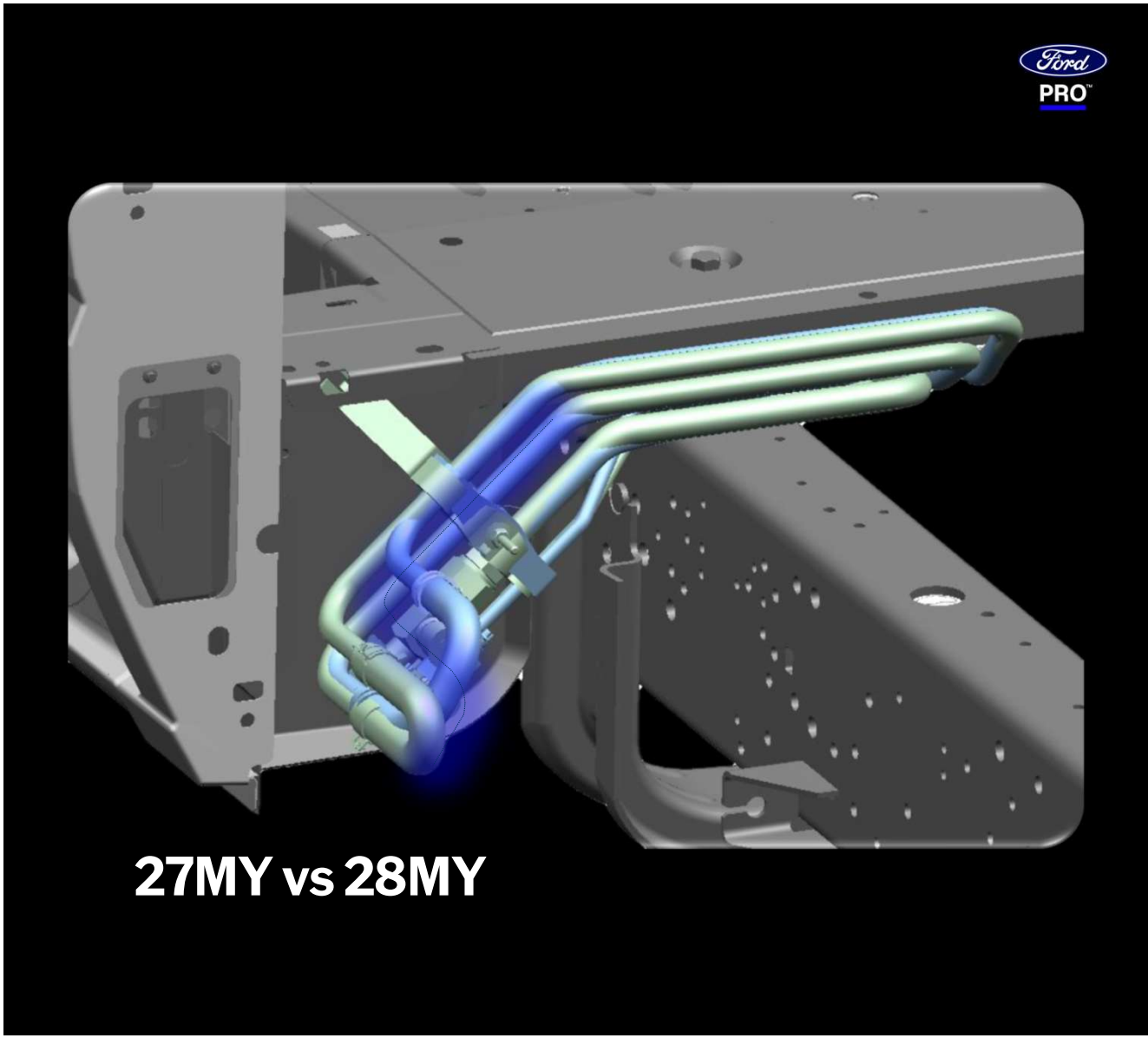

DEAN ATOVSKI

MEDIUM DUTY 2028MY

SVE BULLETIN Q-382: 2028MY MEDIUM DUTY 10-BOLT PTO

- Medium Duty will transition to a 10-speed automatic transmission featuring a 10-bolt PTO mounting port, matching current Super Duty PTO design & specifications.
  (27MY had the 6R140 with a 6-Bolt PTO pattern)

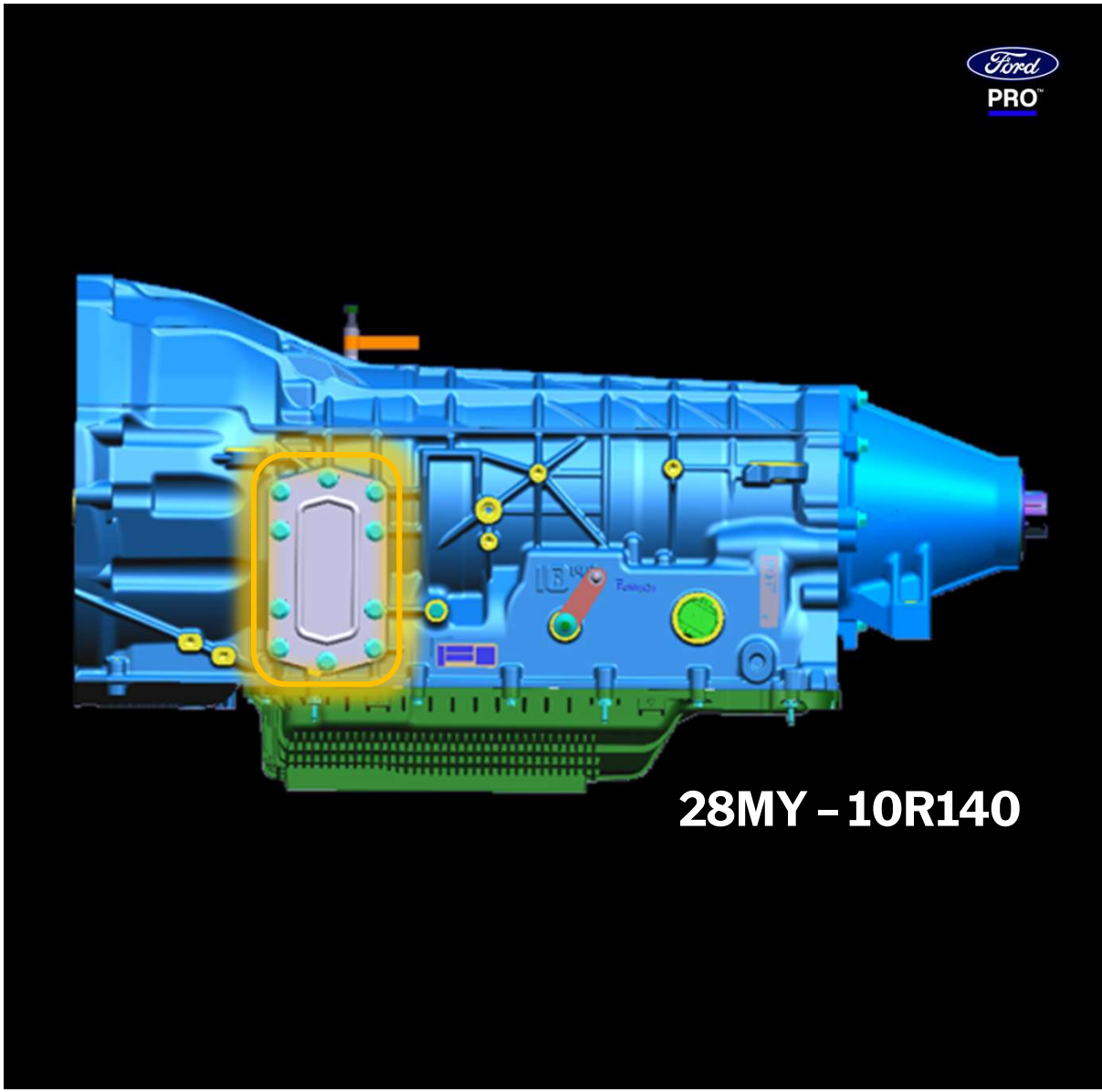

DEAN ATOVSKI

SUPER DUTY®, E-SERIES, & MEDIUM DUTY

7.3L GAS ENGINE & EXHAUST MANIFOLD CHANGES

- **Engine:** Added water-cooled exhaust manifolds, increasing package space at coolant inlet/outlet ports.
- **Cooling Pack: (SUPER DUTY ONLY)**
  - Larger overall; A/C condenser shifted slightly forward at a revised angle; cooling fan is larger, shifted rearward, with a revised shroud.
- **Coolant Circuit:** Added an auxiliary water pump.
- **Action Required:** Upfitters should review full engine compartment CAD for upfit packaging impacts.

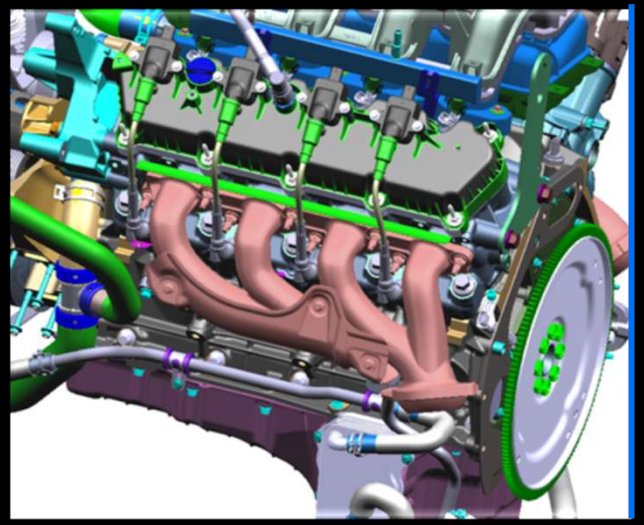

PRIOR MODEL YEAR

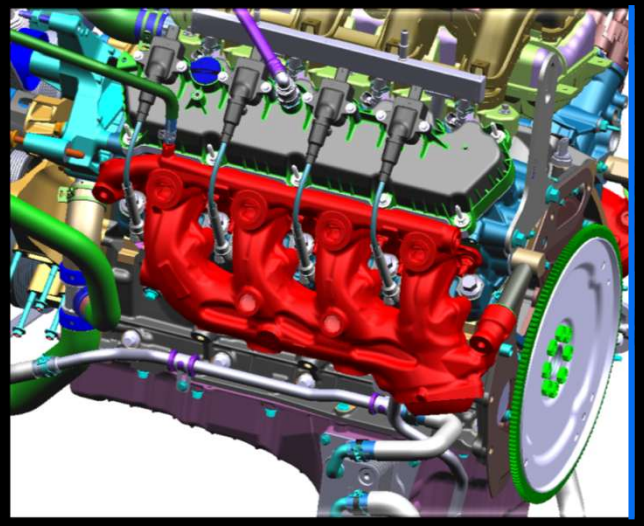

NEW MODEL YEAR

DEAN ATOVSKI

SUPER DUTY® CHASSIS CAB REAR VIEW CAMERA KIT CHANGES

SVE Bulletin Q-378

Model(s) Affected

- **2026 Super Duty® Chassis Cab And Box Delete**
- **Hardware and Optics:** The kit features a redesigned housing, new attaching hardware, and an upgraded camera with an improved Field of View.
- **Technical Updates:** The system includes a new wire connection design and an updated wiring diagram for installation.
- **Production Implementation:** Beginning March 3, 2026, the new Rear-View Camera Prep Kit (Order Code 872) launched on 2026 Super Duty Chassis Cab and Box Delete configurations, *with a brief transition period utilizing both previous- and new-level components until existing inventory was fully depleted.*
- **Service Kit Availability:** A compatible service kit is available for all 2026 models with a center stack screen, covering vehicles built both before and after the March production change.

PREVIOUS MODEL YEAR

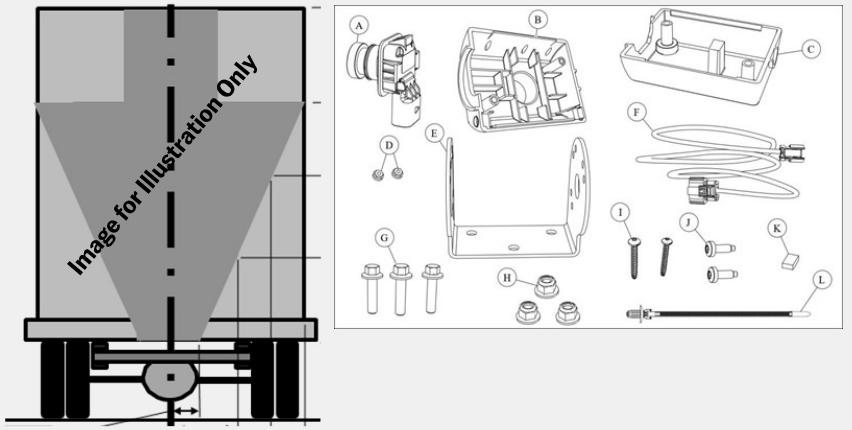

CURRENT MODEL YEAR

Changes as of March 3, 2026

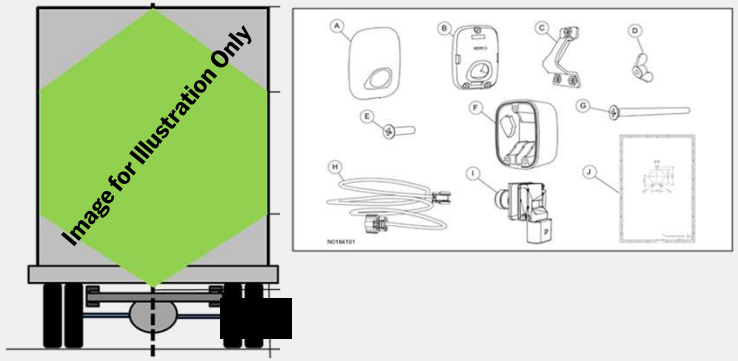

DEAN ATOVSKI

WHEELBASE MODIFICATION FOR TRUCKS EQUIPPED WITH ELECTRONIC STABILITY CONTROL

SVE Bulletin Q-370R1

Model(s) Affected

- **2023 - 2026MY Super Duty®** F-450®/F-550®/F-600® Chassis Cab
- **2025/26MY F-650®/F-750®** Medium Trucks With Hydraulic Brakes
- **2024/26MY E-Series** CA & Stripped Chassis
- **2023/25MY F53/59** Motorhome Chassis/Commercial Chassis

The vehicles all have Electronic Stability Control (ESC) as STANDARD equipment, with an option to delete ESC

Wheelbase modifications affects vehicle ESC function, which may result in substandard performance of the ESC, Anti-Lock Brake or Traction Control systems

Ford Diagnosis and Repair System (FDRS) tool now supports upfitters that modify wheelbases with an app that will update ESC calibrations as needed

Reference the Bulletin for details

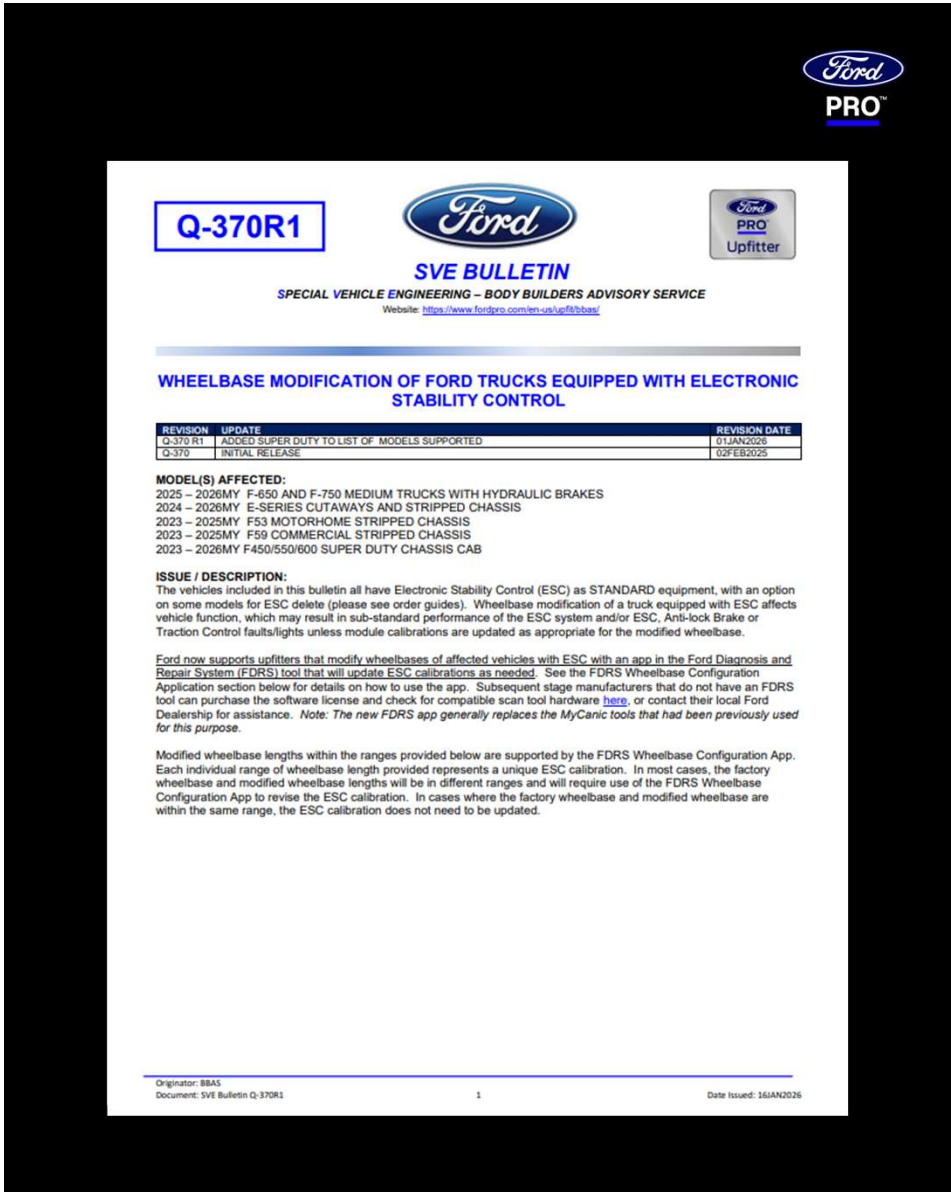

Q-370R1

SVE BULLETIN

SPECIAL VEHICLE ENGINEERING – BODY BUILDERS ADVISORY SERVICE

Website: https://www.fordpro.com/en-us/upfit/bbas/

WHEELBASE MODIFICATION OF FORD TRUCKS EQUIPPED WITH ELECTRONIC STABILITY CONTROL

REVISION	UPDATE	REVISION DATE
Q-370 R1	ADDED SUPER DUTY TO LIST OF MODELS SUPPORTED	01JAN2026
Q-370	INITIAL RELEASE	02FEB2025

MODEL(S) AFFECTED:
2025 – 2026MY F-650 AND F-750 MEDIUM TRUCKS WITH HYDRAULIC BRAKES
2024 – 2026MY E-SERIES CUTAWAYS AND STRIPPED CHASSIS
2023 – 2025MY F53 MOTORHOME STRIPPED CHASSIS
2023 – 2025MY F59 COMMERCIAL STRIPPED CHASSIS
2023 – 2026MY F450/550/600 SUPER DUTY CHASSIS CAB

ISSUE / DESCRIPTION:
The vehicles included in this bulletin all have Electronic Stability Control (ESC) as STANDARD equipment, with an option on some models for ESC delete (please see order guides). Wheelbase modification of a truck equipped with ESC affects vehicle function, which may result in sub-standard performance of the ESC system and/or ESC, Anti-lock Brake or Traction Control faults/lights unless module calibrations are updated as appropriate for the modified wheelbase.

Ford now supports upfitters that modify wheelbases of affected vehicles with ESC with an app in the Ford Diagnosis and Repair System (FDRS) tool that will update ESC calibrations as needed. See the FDRS Wheelbase Configuration Application section below for details on how to use the app. Subsequent stage manufacturers that do not have an FDRS tool can purchase the software license and check for compatible scan tool hardware here, or contact their local Ford Dealership for assistance. *Note: The new FDRS app generally replaces the MyCanic tools that had been previously used for this purpose.*

Modified wheelbase lengths within the ranges provided below are supported by the FDRS Wheelbase Configuration App. Each individual range of wheelbase length provided represents a unique ESC calibration. In most cases, the factory wheelbase and modified wheelbase lengths will be in different ranges and will require use of the FDRS Wheelbase Configuration App to revise the ESC calibration. In cases where the factory wheelbase and modified wheelbase are within the same range, the ESC calibration does not need to be updated.

Originator: BBAS
Document: SVE Bulletin Q-370R1
1
Date Issued: 16JAN2026

DEAN ATOVSKI

FORD BODY BUILDER ADVISORY SERVICE (BBAS)

Ford BBAS has moved to FordPro.com

New common website link and layout with Ford Pro™ Upfitter to access useful product resources, such as body builder layout books and incomplete vehicle manuals, for commercial and police vehicles

- Go to resources > Body Builder Advisory Service: Fordpro.com/en-us/upfit/bbas
- The landing page directs to the BBAS helpdesk requests (General or CAD Request) to obtain certain Publications or Vehicle Integration System 2.0 information



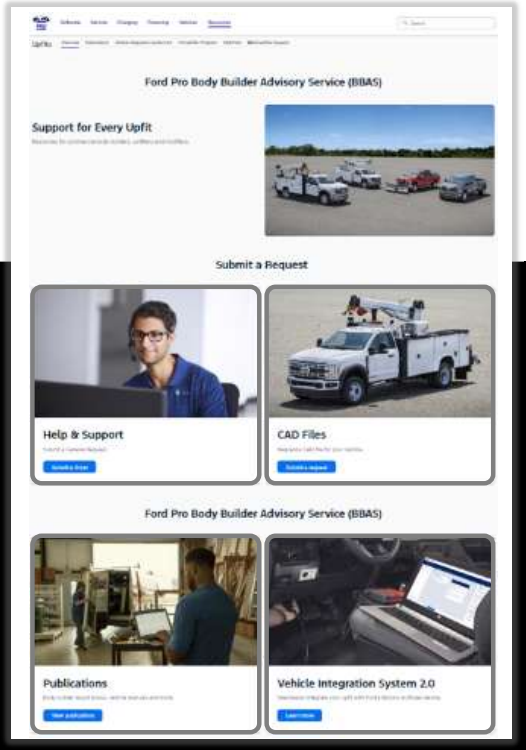

DEAN ATOVSKI

FORD BODY BUILDER ADVISORY SERVICE (BBAS) UPDATES

Subscribe to BBAS Updates

A refreshed “Subscription Service” provides weekly email notifications for any Bulletins and/or Publications that have been uploaded to the Ford Body Builder Advisory Service website.

Simple, just add your email address, and click “Get Updates.”

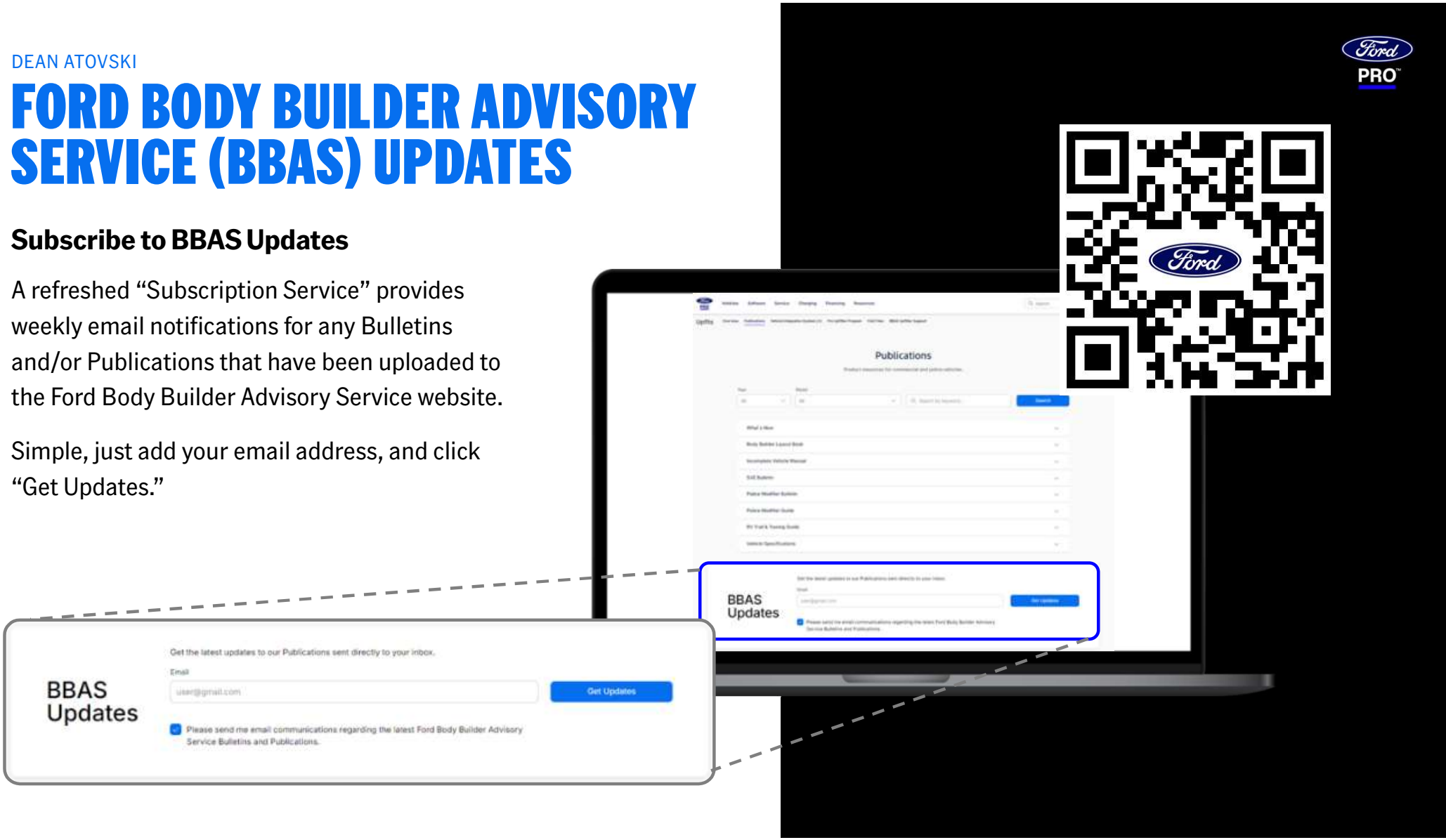

DEAN ATOVSKI

FORD BODY BUILDER ADVISORY SERVICE UPDATES

Introducing the AI Technical Assistant for Body Builders & Upfitters

Accelerating commercial integration with instant, conversational access to Ford publications, chassis specifications, and electrical schematics.

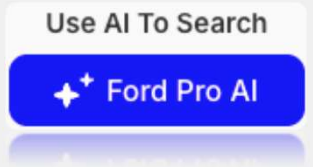

NATURAL LANGUAGE SEARCH

Instant Publication Intelligence
Ask engineering questions across Body Builder Layout Books (BBLB), SVE Bulletins, and guides with verifiable citations.

SPECIFICATIONS

Wiring & System Integration
Extract chassis mounting points, PTO parameters, load ratings, and Upfitter Integration System (UIS) harness pinouts in seconds.

ROUND-THE-CLOCK ENABLEMENT

Streamlined Engineering Cycles
Eliminates multi-hundred-page manual PDF searches, providing 24/7 technical self-service for engineering and build teams.

ESTABLISHED & AUTHENTICATED ACCESS REQUIRED

In order to access and utilize the AI Technical Assistant, users must have an established, authenticated account registered with Ford Pro.

Applicable Business Categories (Fleet.Ford or New Enrollment):

- FMC, Government Organizations, Police, Upfitters, Rental, Delivery, Pool Accounts, Taxi, and Limo Companies.

Fleet Identification Number (FIN) Mandate:

- Active FIN is strictly required to establish authenticated Ford Pro credentials.

Account Setup & Registration Steps:

- Existing FIN Organizations: Contact your site administrator to create and activate your user login.
- Newly Enrolled FIN Accounts (after May 21, 2026): Follow the onboarding instructions in your official welcome package to complete authentication setup.

NOW LIVE ON THE FORD PRO™ UPFIT PUBLICATIONS PORTAL

Access directly at: https://www.fordpro.com/en-us/upfit/publications/

DEAN ATOVSKI

FORD BODY BUILDER ADVISORY SERVICE UPDATES

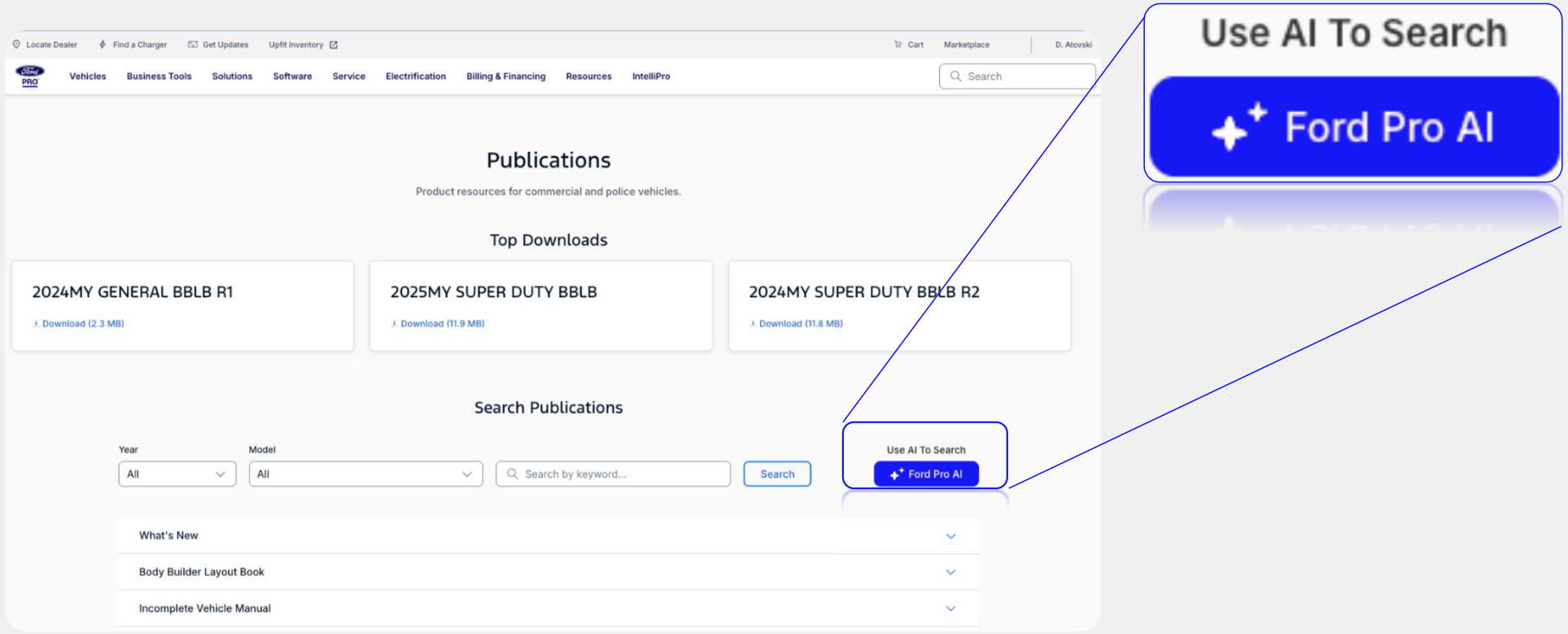

NOW LIVE ON THE FORD PRO™ UPFIT PUBLICATIONS PORTAL

Access directly at: https://www.fordpro.com/en-us/upfit/publications/


Ford
PRO™

Ford PRO™

THANK YOU

Body Builder Advisory Service Team • Upfit Publications Tech Team • Technical Leadership Team



THANK YOU