NTEA Upfitting Summit

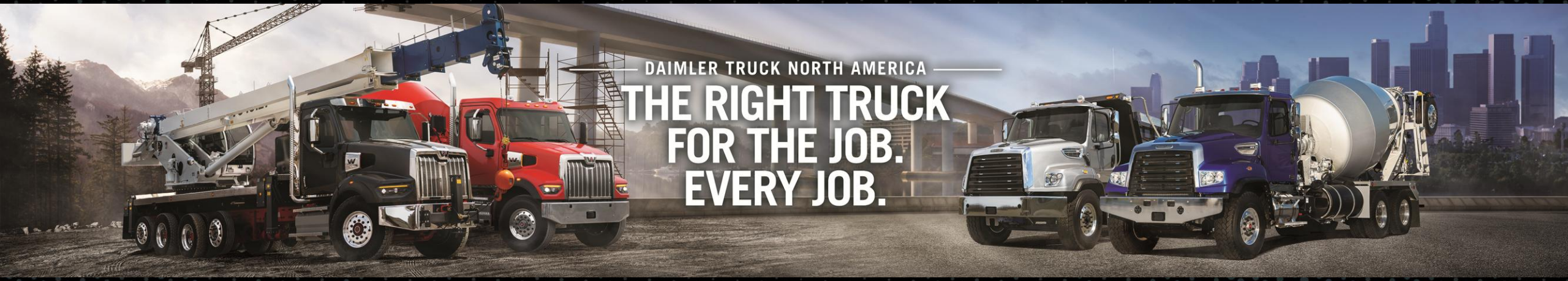

October 14, 2026

FREIGHTLINER
WESTERN STAR
DETROIT

Agenda 2026

- Who is Daimler Truck North America?
- Product Updates & New Option Availability
- Powertrain Updates
- CHEC Updates
- What to look for in the Vehicle Display
- DTNA Upfit Experience

FREIGHTLINER

WESTERN STAR

DETROIT

Who is DTNA?

DAIMLER TRUCK

North America

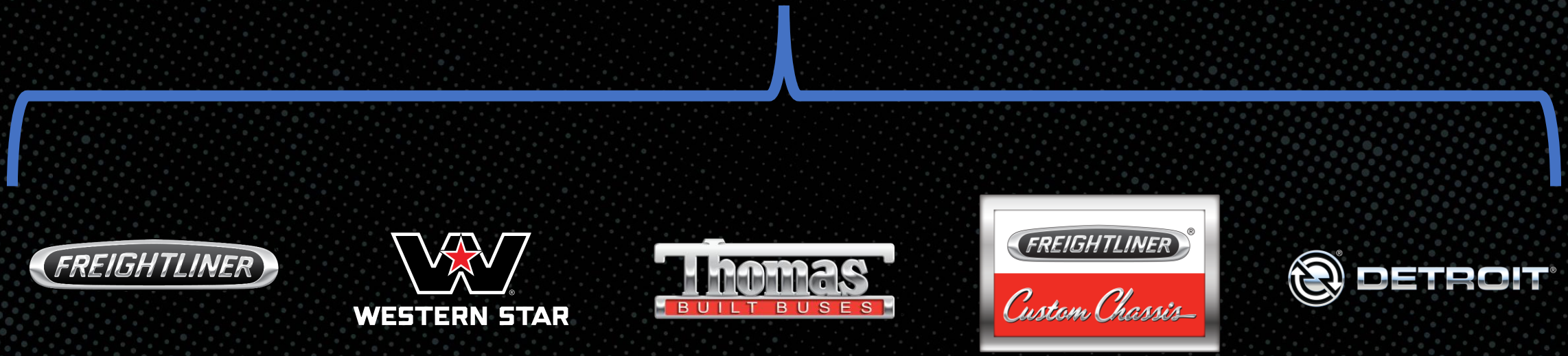

Who is DTNA?

DAIMLER TRUCK

North America






FREIGHTLINER®

Freightliner Medium Duty



Class	6-8
GVWR	Up to 66k lbs
Horsepower	200-360 HP
Torque	520-1150 lb-ft
Pre-EPA27 Engines	Detroit DD5 Detroit DD8 Cummins B6.7 Cummins L9
EPA27 Engines	Cummins B6.7 Octane Cummins X10



Class	6-7
GVWR	26k or 33k lbs
Horsepower	190 or 255 HP (Economy Mode)
Typical Range	180 or 250 miles
Propulsion	Detroit eAxle (single or dual-motor)
Battery	Detroit HV Battery (194 or 291 kWh)
Charging	CCS1 DC charging up to 180 kW 80% in ~60 or ~90 min.

Engine Ratings based on 2026 Availability

Freightliner Heavy Duty



Class	7-8
GVWR	Up to 69k lbs
Horsepower	220-380 HP*
Torque	520-1250 lb-ft
Pre-EPA27 Engines	Cummins B6.7 Cummins L9
EPA27 Engine	Cummins X10





Class	7-8
GVWR	Up to 92k lbs (without lift axles)
Horsepower	260-525 HP
Torque	720-1850 lb-ft
Pre-EPA27 Engines	Detroit DD13 Gen 5 Cummins X12 Cummins L9 Cummins L9N
EPA27 Engines	Detroit DD13 Gen 6 Cummins L9N Cummins X10


WESTERN STAR

Western Star: Built to Work. Built to Last.

47X



Class	8
Horsepower	260-525 HP
Torque	860-1850 lb-ft
Pre-EPA27 Engines	Detroit DD13 Gen 5 Cummins L9 Cummins X12
EPA27 Engines	Detroit DD13 Gen 6 Cummins X10

49X



Class	8
Horsepower	350-605 HP
Torque	1350-2050 lb-ft
Pre-EPA27 Engines	Detroit DD13/DD15 Gen 5 Detroit DD16 Cummins X12 Cummins X15
EPA27 Engines	Detroit DD13/DD15 Gen 6 Detroit DD16 Gen 6 Cummins X15

Engine Ratings based on 2026 Availability

Product Updates:
New Option Availability



X-Series Symmetrical Fuel Tank Positioning

WESTERN STAR

What is it?

Sales code 212-091 enables factory-configured symmetrical fuel tank placement on Western Star X-Series models with dual fuel tanks.

Why is it important?

By eliminating the traditional line note and engineering review process, dealers can more easily order a clean, balanced fuel tank layout directly from the factory.

Data Code	Description
212-091	SYMMETRICAL FUEL TANKS AFT, ALIGNED TO AFTMOST TANK
218-006	25 INCH DIAMETER FUEL TANK(S)

Before 212-091

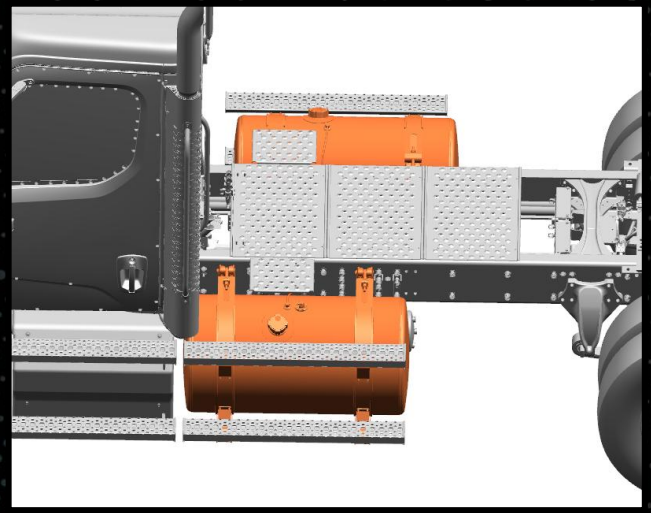

After 212-091

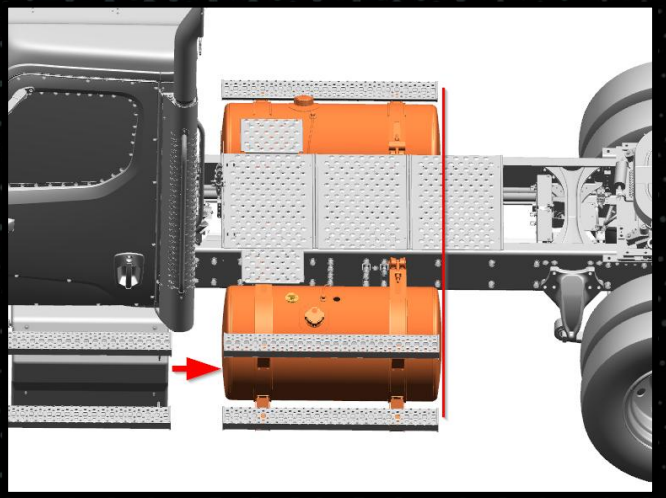

MirrorEye® Prewire for X-Series

WESTERN STAR

What is it?

Data code 7A1-010 provides a factory-installed prewire for CTS installation of the Stoneridge MirrorEye® Camera Monitor System on Western Star 47X and 49X models. The completed installation provides a production-quality system integrated with the vehicle's electrical architecture.

Why is it important?

The factory-engineered wiring foundation reduces aftermarket installation time and cost while supporting improved visibility and blind-spot awareness. The option is not available with trench-roof configurations, and vehicles continue to leave the factory with traditional glass mirrors.



Data Code	Description
7A1-010	MIRROR CAM PREWIRE

How to Order:

1. **Apply pre-wire sales code to your new X-Series order:**

   7A1-010

2. **Order the Stoneridge MirrorEye® retrofit kit:**

   Steve Lawrence
   1-888-624-1331
   Steven.Lawrence@stoneridge.com

3. **Contact Custom Truck Services for a quote and install**

CONTACT US

Chalmers 30K Rear Suspension

WESTERN STAR

What is it?

The Chalmers 1030 Series 30,000-lb single rear suspension is now available on Western Star 47X and 49X models with the Meritor 30K U-Series rear axle.

Why is it important?

Its compact design supports tight packaging requirements (short wheelbase and rear overhang), and body equipment integration. Enhanced articulation provides capability in off-road conditions.



Data Code	Description
622-069	CHALMERS 1030 30,000# REAR SUSPENSION

Heated Windshield

This option provides a factory-installed heated windshield for cold environments. This features strategically placed defroster vents and electric heat elements in the bottom portion of the windshield to reduce snow and ice accumulation. As an update from the initial release in 2025, the heated windshield **will no longer require the aux VPDM**. This option offers a solution to customers operating in colder climates where additional de-icing is needed to improve driving visibility. This is offered on the 47X/49X and is in production today.

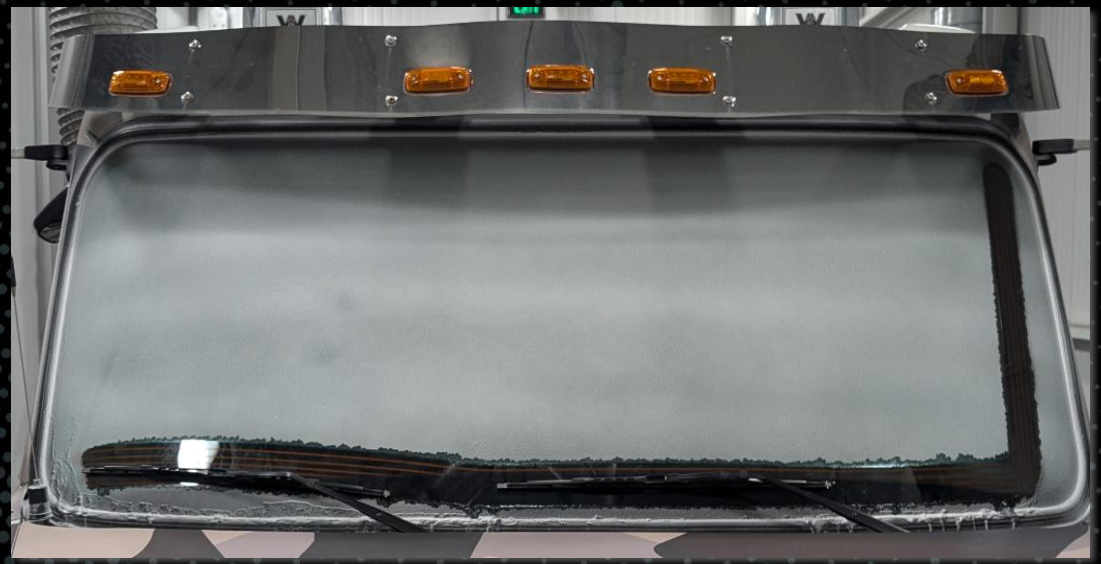



Data Code	Description
663-032	1-PIECE ROPED-IN HEATED WINDSHIELD

X-Series QuickFit Body Lighting at End of Frame

WESTERN STAR

What is it?

Western Star now routes QuickFit body-lighting to the end of frame, with the appropriate brackets installed at the factory. This factory-routed solution replaces the loose jumper harness previously supplied inside the cab.

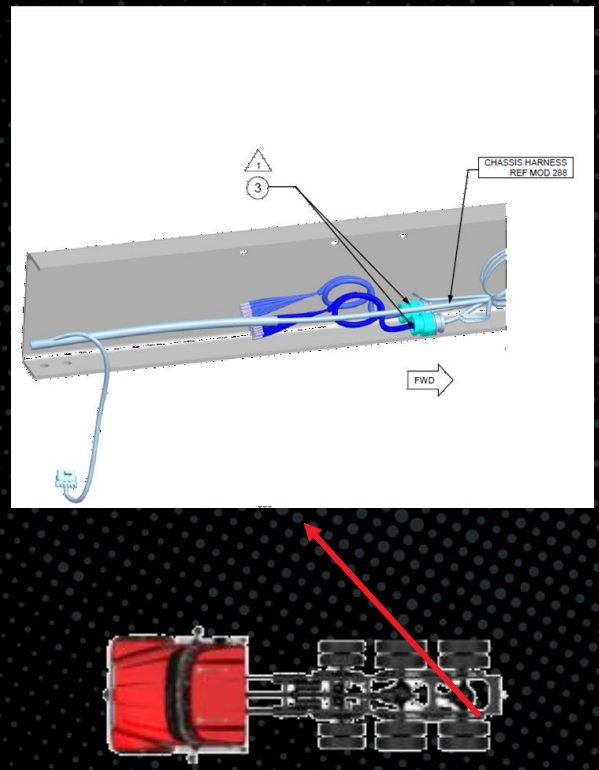

Why is it important?

The factory-routed solution reduces the time TEMs spend locating, routing, and securing wiring. It also supports faster body-lighting connections, cleaner installations, and fewer opportunities for wiring errors

Data Code	Description
353-075	QUICKFIT BODY LIGHTING CONNECTOR AT END OF FRAME, WITH CAP
353-076	QUICKFIT BODY LIGHTING CONNECTOR AT END OF FRAME, WITH BLUNTCUTS

Today's Split Shaft PTO Offerings

WESTERN STAR

1.) Basic Jackshaft Prep

Best for:
Customer installing preferred split shaft gearbox, post delivery

Key Sales Codes:
385-005 + 377-800

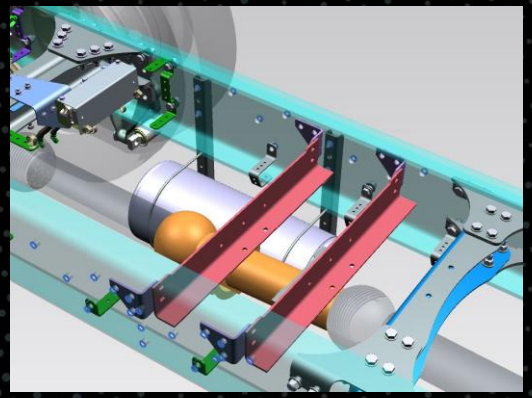

2.) NAMCO Prep Kit

Best for:
Customer installing selected NAMCO gearbox, post delivery

Key Sales Codes:
377-801 + 374-002

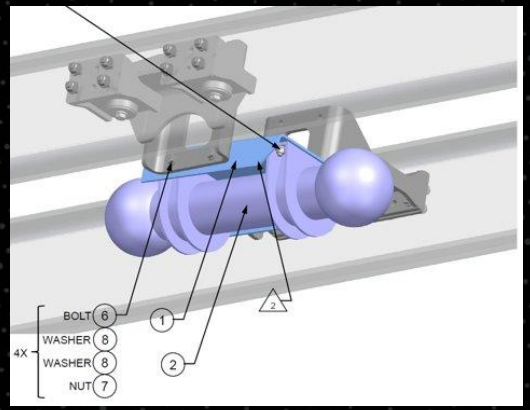

3.) Factory Installed NAMCO Gearbox

Best for:
Minimal PTO installation after truck delivery
Key Sales Codes:
377-021 through 377-034



ORDERING BUILDING BLOCKS

377 Customer-furnished / installed PTO intent
376 Split-shaft controls
385-005 Jackshaft prep | 385-004 fire pumper
374 Mounts with isolators

54K GAWR for Fire & Emergency

What is it?

The Hendrickson FIREMAAX® 54K rear suspension is now available on the Freightliner 114SD Plus when paired with the Meritor 58K rear axle, delivering a certified 54,000-lb GAWR.



Why is it important?

FIREMAAX® provides the ride quality, stability, and articulation needed to protect sensitive emergency equipment and operate confidently in demanding conditions. The 54K rating also helps the 114SD Plus meet high-capacity fire and emergency bid requirements.

Data Code	Description
420-053	Meritor RT-58-185 58K Tandem Rear Axle
622-1H9	Hendrickson FIREMAAX EX 54K Rear Air Suspension

Detroit Assurance Front Radar Harness Extension

What is it?

This option provides 60 inches of front radar harness length on Freightliner M2 106 Plus and 114SD Plus models. The extended harness is available regardless of the selected bumper or front frame extension configuration. Reference the A&I guide TEM-11-0001 for detailed relocation guidance.

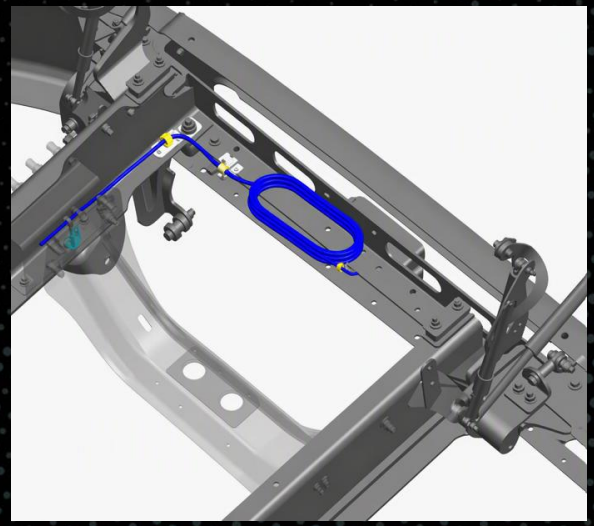

Why is it important?

The additional harness length gives TEMs greater flexibility to relocate the radar around body installations, bumper modifications, and vocational equipment. It simplifies radar relocation while supporting proper Advanced Driver Assistance System functionality



Data Code	Description
72N-001	EXTRA HARNESS LENGTH FOR FRONT RADAR RELOCATION

Two Quickfit Programmable Interface Connectors Under Cab

What is it?

The QuickFit Programmable Interface Connector (48C), previously available with one in-cab connector and one exterior connector, can now also be ordered with both connectors located at the rear of the cab.

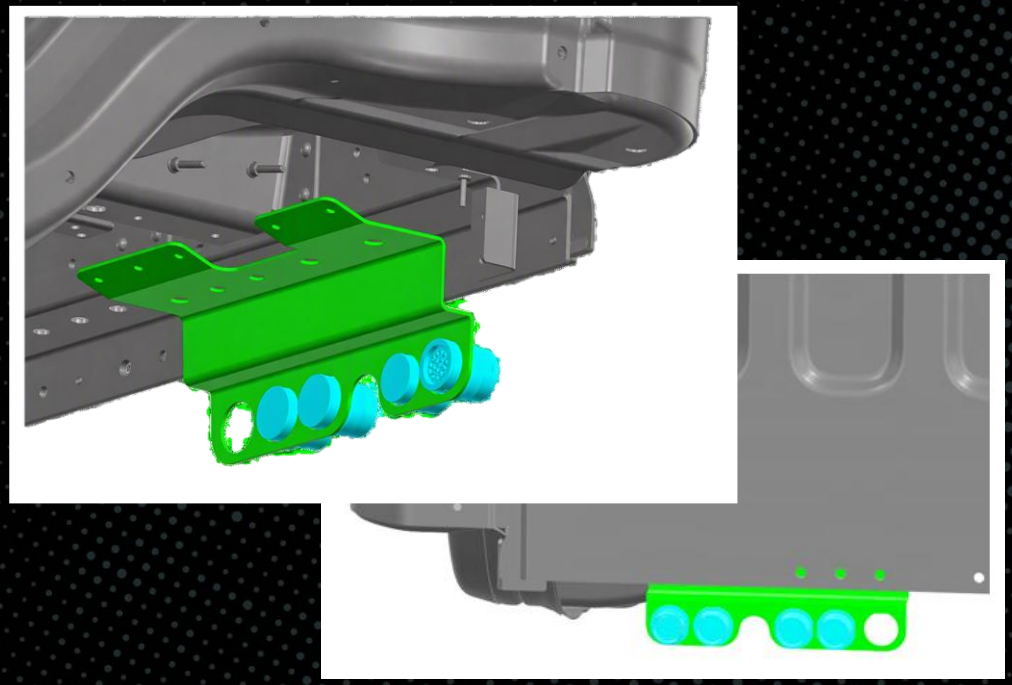

Why is it important?

The QuickFit Programmable Interface Connector provides body builders with a simple, OEM-integrated connection point for vehicle inputs, outputs, and programmable functions. By providing two connectors with outside access, body builders gain additional flexibility to support multiple systems simultaneously, reducing installation complexity and minimizing the need for custom wiring modifications.

Data Code	Description
48C-011	QUICKFIT PROGRAMMABLE INTERFACE CONNECTORS 1 & 2 UNDER CAB W/ CAP
48C-012	QUICKFIT PROGRAMMABLE INTERFACE CONNECTORS 1 & 2 UNDER CAB W/ BLUNTCUTS

Targeting production in Q1 2027

New High Amperage Wiring Combinations

What is it?

Now available are two new high-current power cabling configuration routed to the Body Builder Connector (BOC).

- 6-foot 150A cable *and* 200A cable wired to BOC with Anderson connectors
- 250A cable extending to approximately 3 feet aft of front axle centerline

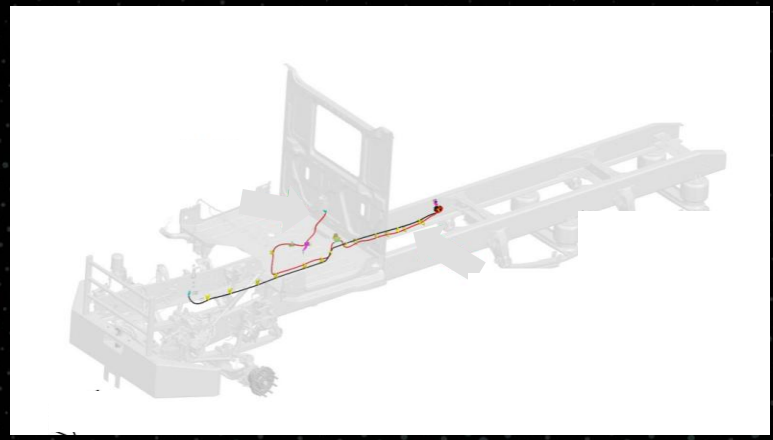

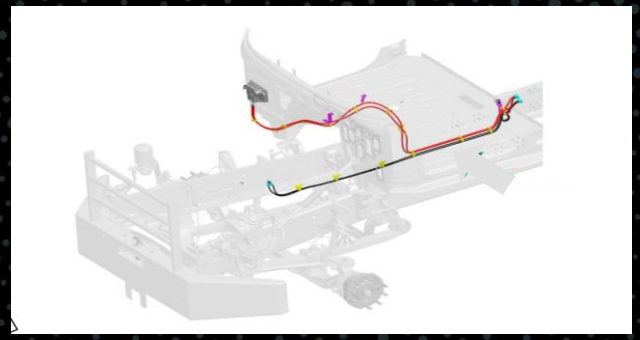

Why is it important?

This configuration enables customers to independently power multiple high-current body systems without requiring aftermarket modifications. Providing factory-installed wiring and connectors improves ease of body installation, and reduces upfitter labor and complexity.

Targeting production in Q1 2027

Data Code	Description
30K-094	BB HI CRNT,250 AMP,BLNT CT, LH IN RAIL,RR AXLE CTR LINE +3FT CABLE,EMER HYD PUMP
30K-095	2-WAY HD 150 & 200A,ANDERSON CONN, RH RL, 6FT FRM BOC

Powertrain Availability Updates



DTNA Engine Model Availability

2026

Detroit
DD5
DD8
DD13
DD15
DD16

Cummins
B6.7 (Diesel)
B6.7 Octane
L9
L9N
X12
X12N
X15
X15N

2027 Q1/Q2

Detroit
DD13
DD15
DD16

Cummins
B6.7 (Diesel)
B6.7 Octane
L9
L9N
X12
X12N
X15
X15N

2027 Q3/Q4

Detroit
DD13
DD15
DD16

Cummins
B6.7 (Diesel)
B6.7 Octane
X10
L9N
X12N
X15
X15N

2028

Detroit
DD13
DD15
DD16

Cummins
B6.7 Octane
B7.2
X10
L9N
X15
X15N

Power Ratings Comparison
13L and Under - Current

WESTERN STAR

FREIGHTLINER

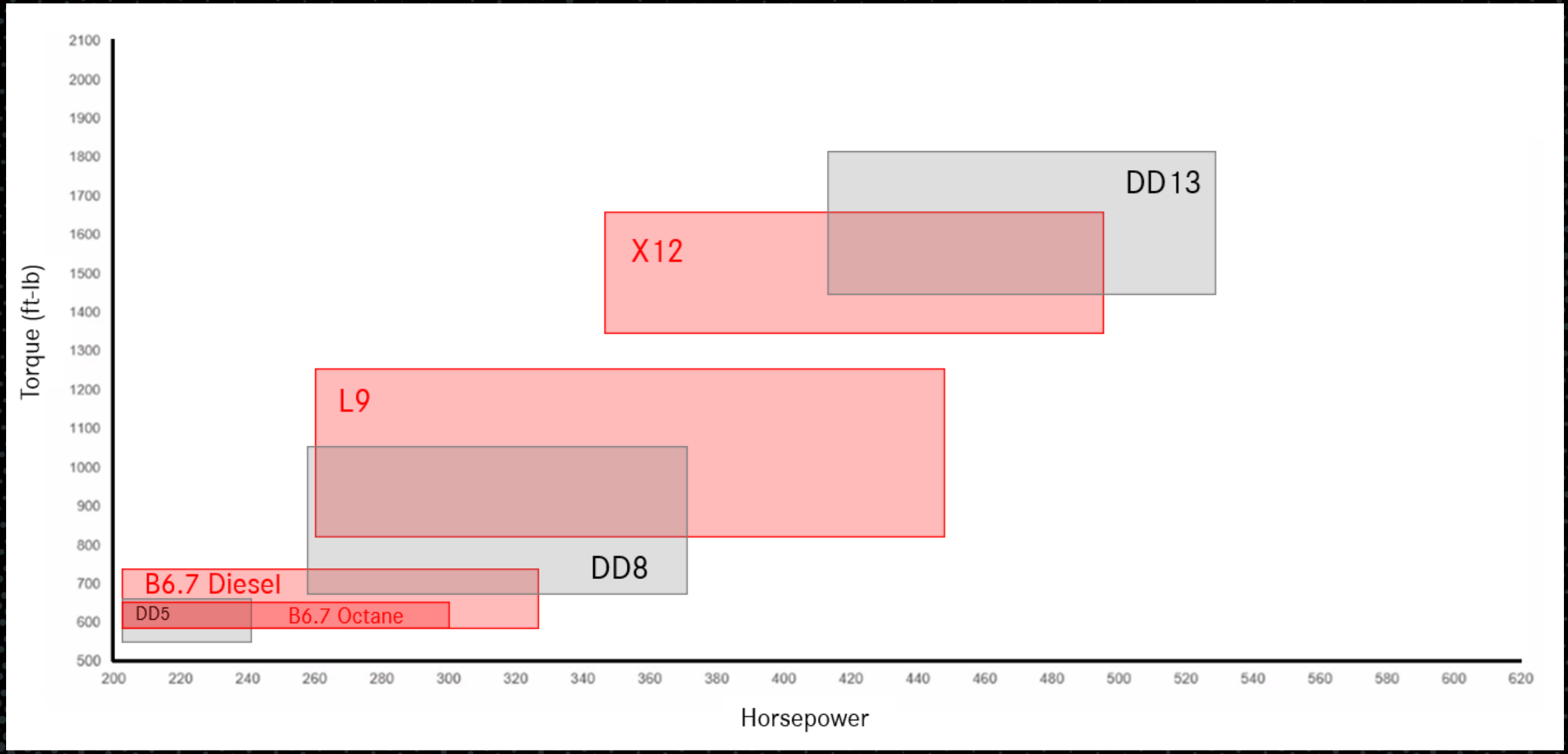

Power Ratings Comparison
13L and Under - Q1/Q2 2027

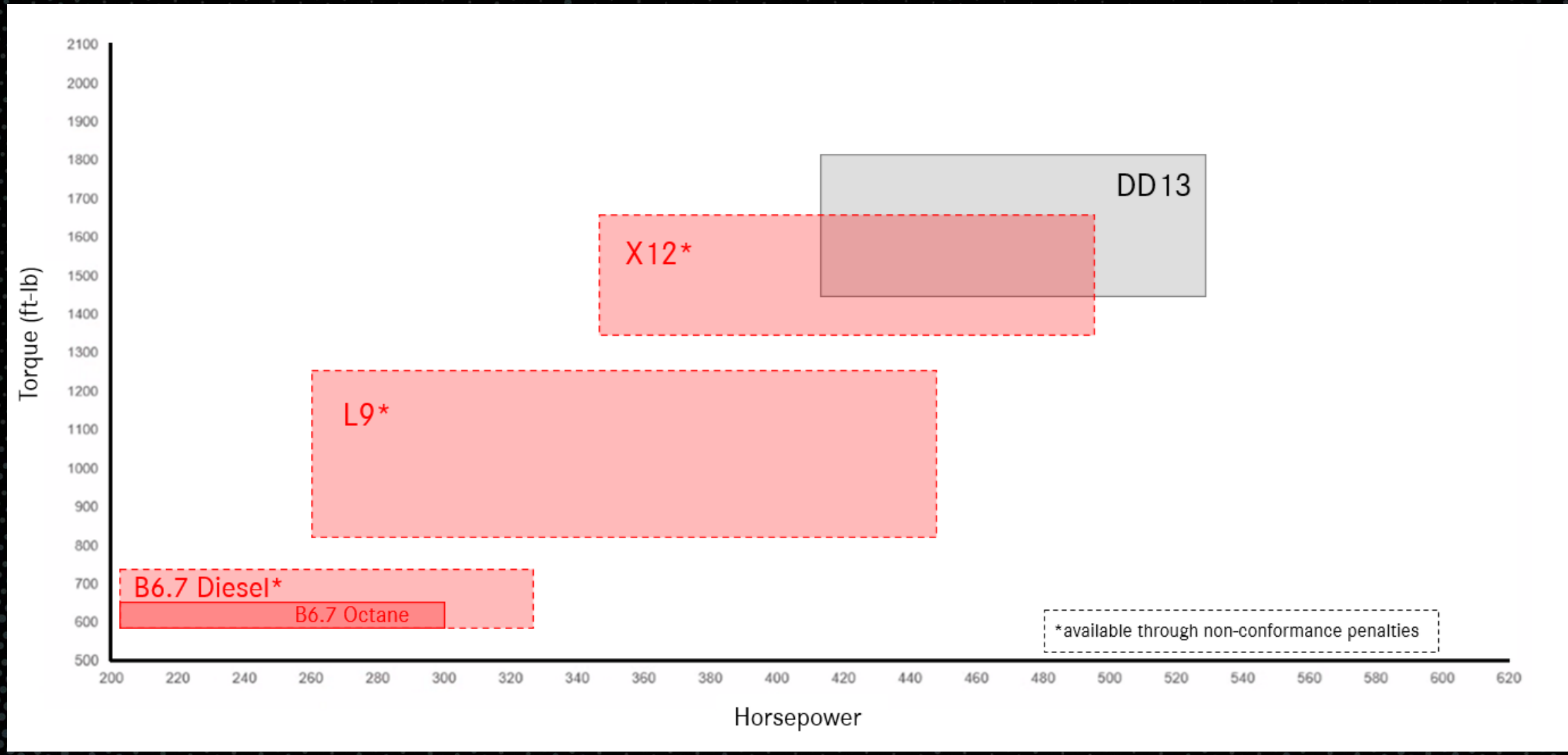

Power Ratings Comparison
13L and Under - Q3/Q4 2027

WESTERN STAR

FREIGHTLINER

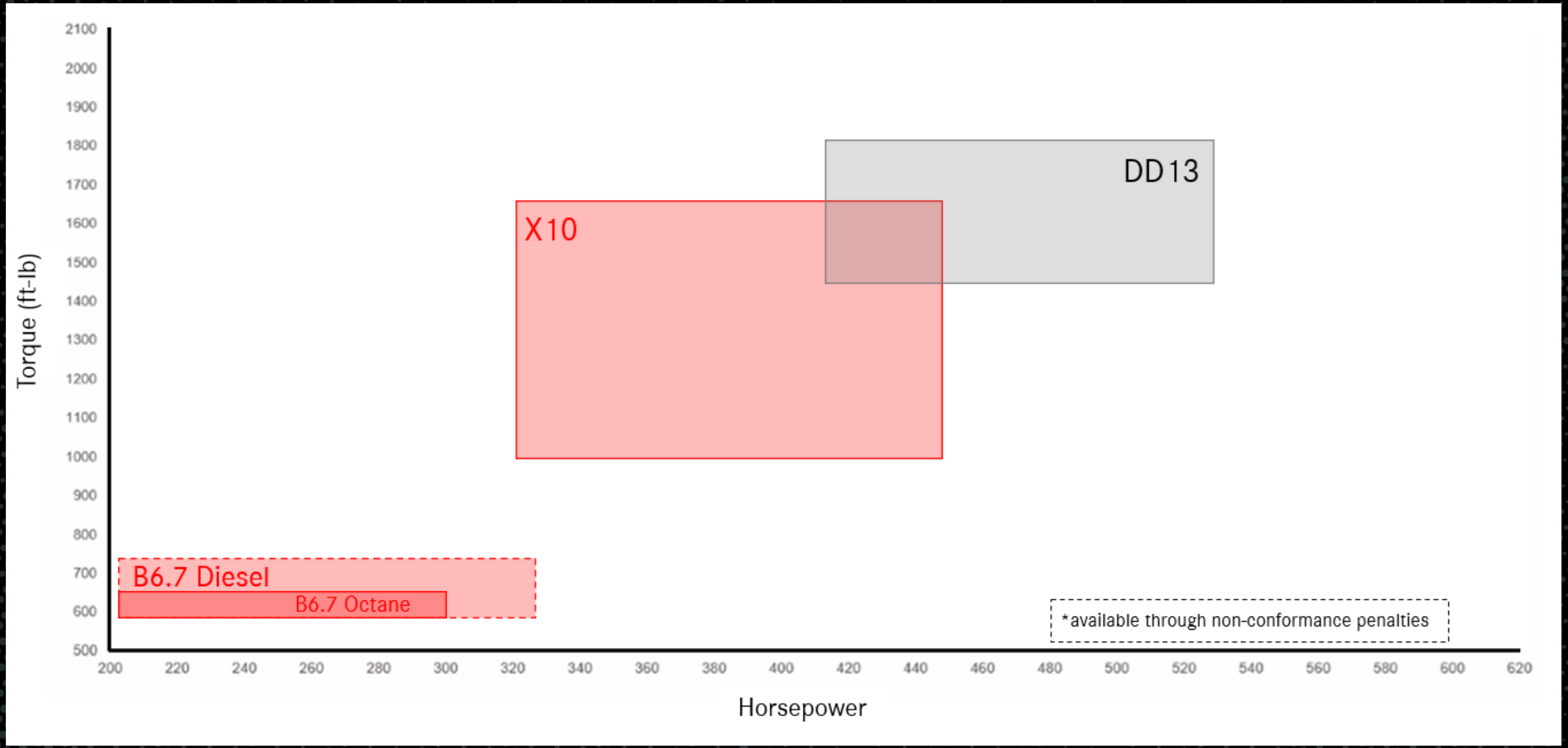

Power Ratings Comparison
13L and Under - 2028

WESTERN STAR

FREIGHTLINER

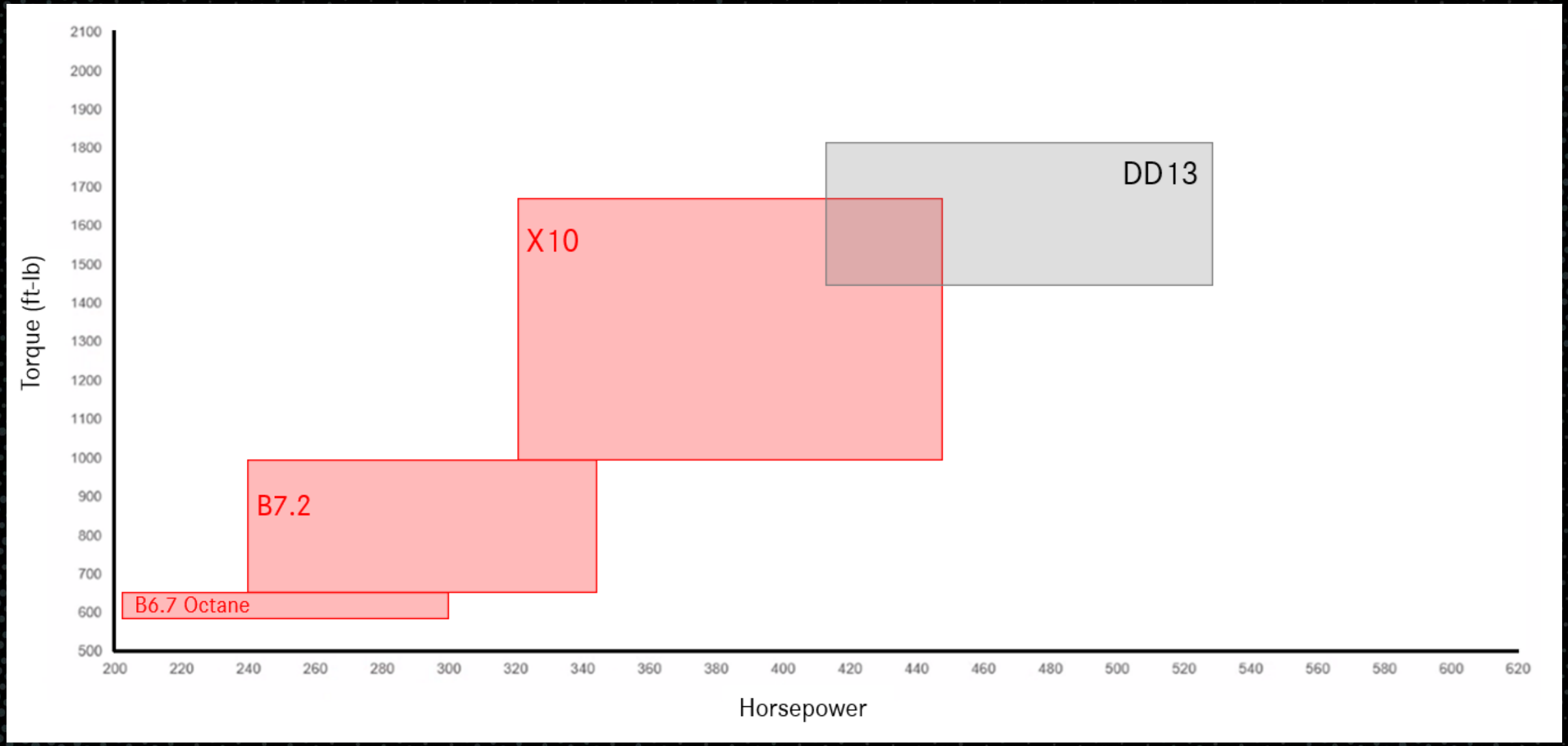

M2 106 Plus

B6.7 Octane



Horsepower	Torque LB/FT
200	600
220	600
260	600
300	660

HP @ 1750-2400 PRM
Torque LB/FT @ 1550-1800 RPM

B6.7



HP @ 2400 PRM
Torque LB-FT @ 1600 RPM

*Restricted Ratings

Horsepower	Torque LB-FT
200	600
220	600
240	600
250	660
260	660
280	660
300	660
325	750
340*	700
360*	800

Q3 2027+ X10



HP @ 2200 PRM
Torque LB-FT @ 1200 RPM

Horsepower	Torque LB-FT
320	1000
350	1000
350	1050
360	1150
370	1250

Refuse, RV, EV Ratings not all shown



SUBJECT TO CHANGE

108SD Plus

FREIGHTLINER

Current

B6.7



HP @ 2400 PRM
Torque LB-FT @ 1600 RPM

Horsepower	Torque LB-FT
240	600
250	660
260	660
280	660
300	660
325	750
340	700
360	800

L9

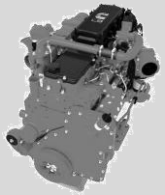

HP @ 2200 PRM
Torque LB-FT @ 1200 RPM

260	860
270	860
300	860
330	1000
350	1050
360	1150
370	1250
380	1250
380	1150
400	1250

Q3 2027+

Horsepower	Torque LB-FT
320	1000
350	1000
350	1050
360	1150
380	1150
370	1250
380	1250
400	1250

Refuse, RV, EV Ratings not all shown

X10



HP @ 1600-2200 PRM
Torque LB-FT @ 1000-1200 RPM



SUBJECT TO CHANGE

47X and 114SD Plus





Current

L9

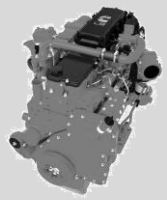

HP @ 2200 PRM
Torque LB-FT @ 1200 RPM

Horsepower	LB-FT
260	860
270	860
300	860
330	1000
350	1050
360	1150
370	1250
380	1250
380	1150
400	1250
450	1250

X12



HP @ 1900 PRM
Torque LB-FT @ 1000 RPM

350	1350
350	1450
370	1250
370	1350
380	1450
410	1450
430	1550
430	1650
455	1550
455	1700
475	1700
500	1700

Q3 2027+

Horsepower	Torque LB-FT
320	1000
350	1000
350	1050
350	1350
360	1150
370	1250
380	1150
380	1250
380	1350
400	1250
400	1650
410	1450
450	1250
450	1450
450	1650

Refuse, RV, EV Ratings not all shown

X10



HP @ 1600-2200 PRM
Torque LB-FT @ 1000-1200 RPM

49X X15



EX Ratings

Horsepower	@ RPM	Torque LB/FT	@ RPM
420	1700	1650	900
420		1750	
420		1850	
450		1750	
450		1850	
500		1850	
525	1900	1850	1000
565		1850	
565		2050	

V Ratings

Horsepower	@ RPM	Torque LB/FT	@ RPM
500	1900	1850	900
565	1950	1850	1000
605		1850	
605		2050	

Standard Ratings

Horsepower	@ RPM	Torque LB/FT	@ RPM
525	1900	1850	1000
565		1850	
565		2050	

EV & RV Ratings

Horsepower	@ RPM	Torque LB/FT	@ RPM
525	RV - 1800	1850	1000
565		1850	
565		2050	
565	EV - 2100	1850	1000
605		1950	

Freightliner M2 106 Plus Day Cab

2026
L9 MHP

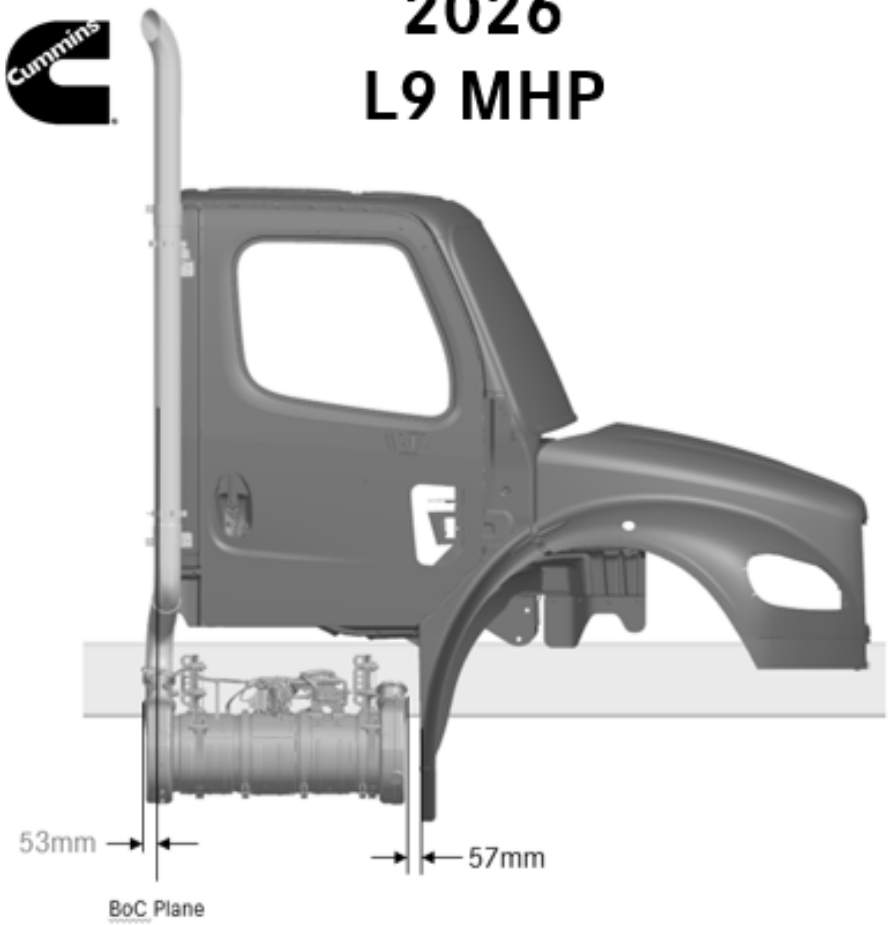

6.0 X 257 X 86.5 rail

2027
X10 ≤1250 LB-FT

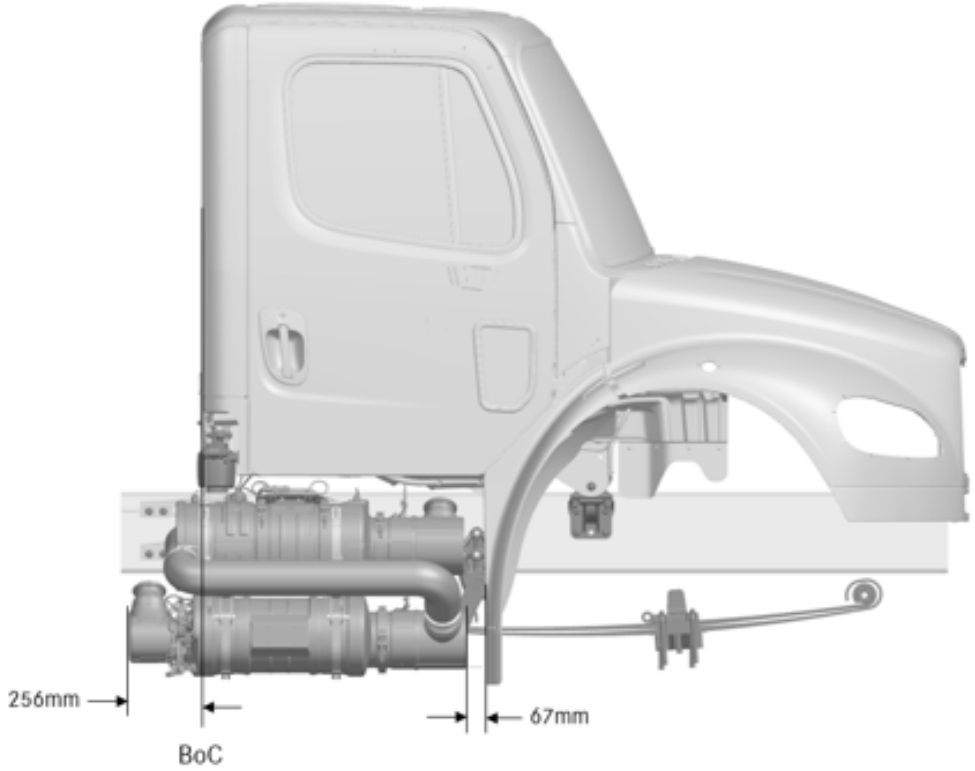

Freightliner M2 106 Plus Day Cab

2027 X10 Vertical ATS

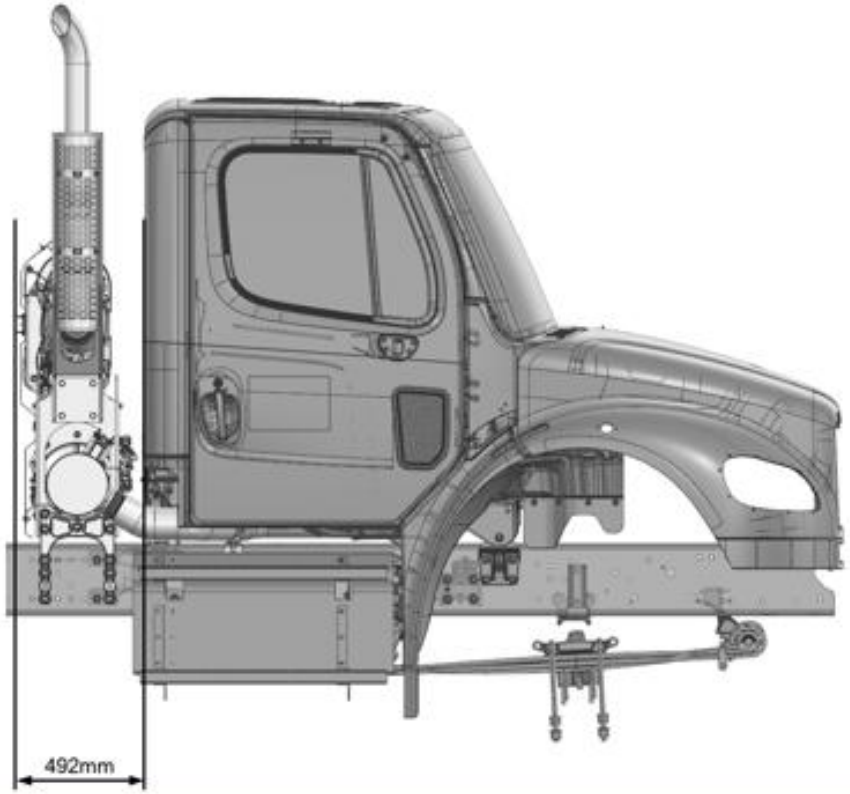

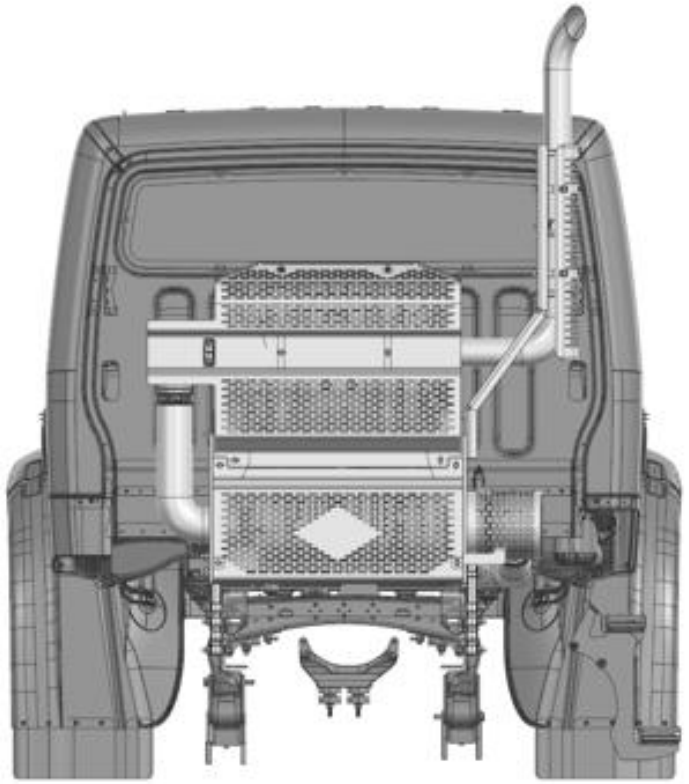

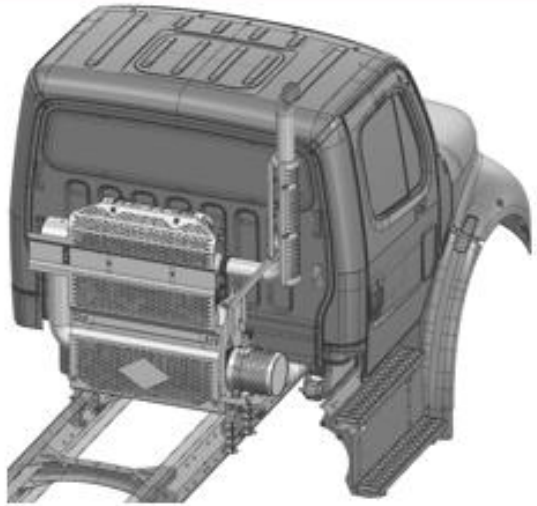

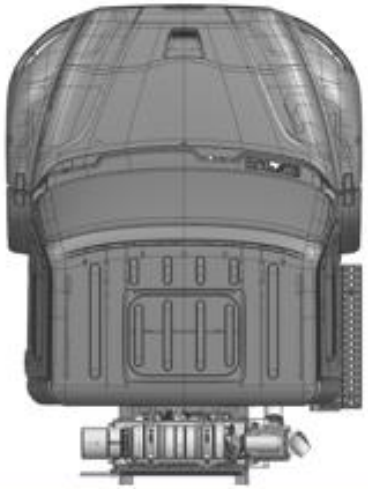

Freightliner 108SD Plus Day Cab

FREIGHTLINER

FREIGHTLINER

Cummins

2027

X10 ≤1250 LB-FT

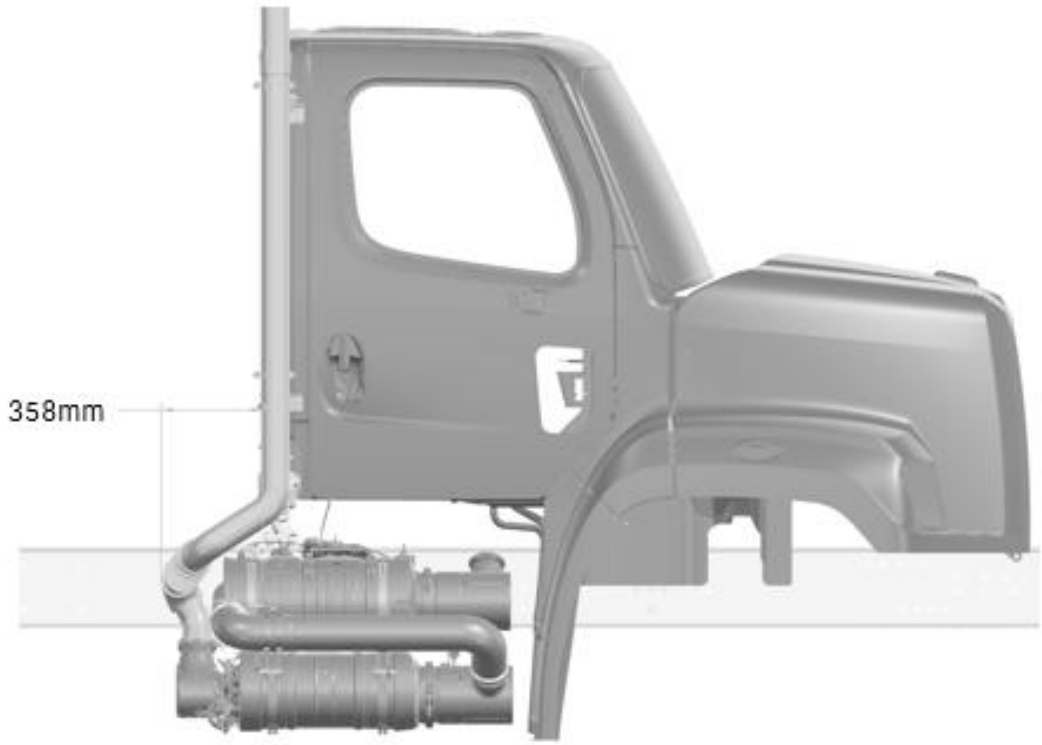

2027 X10 Vertical ATS

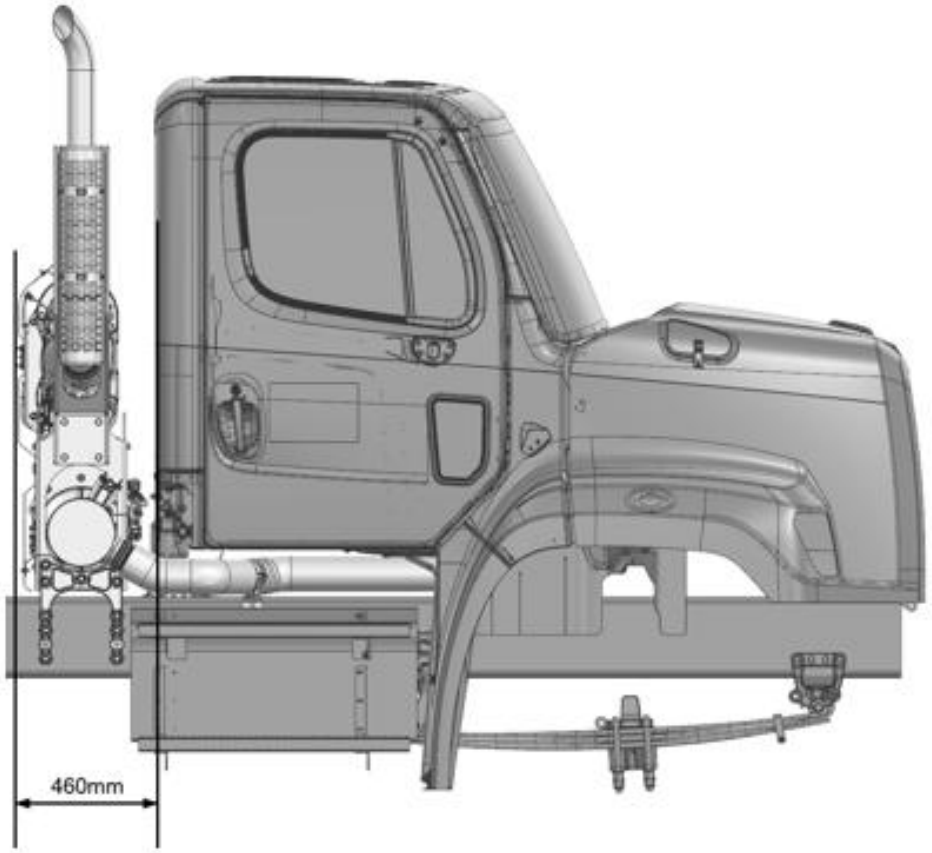

Freightliner 114SD Plus Day Cab

2027 SBA
X10 ≤1250 LB-FT

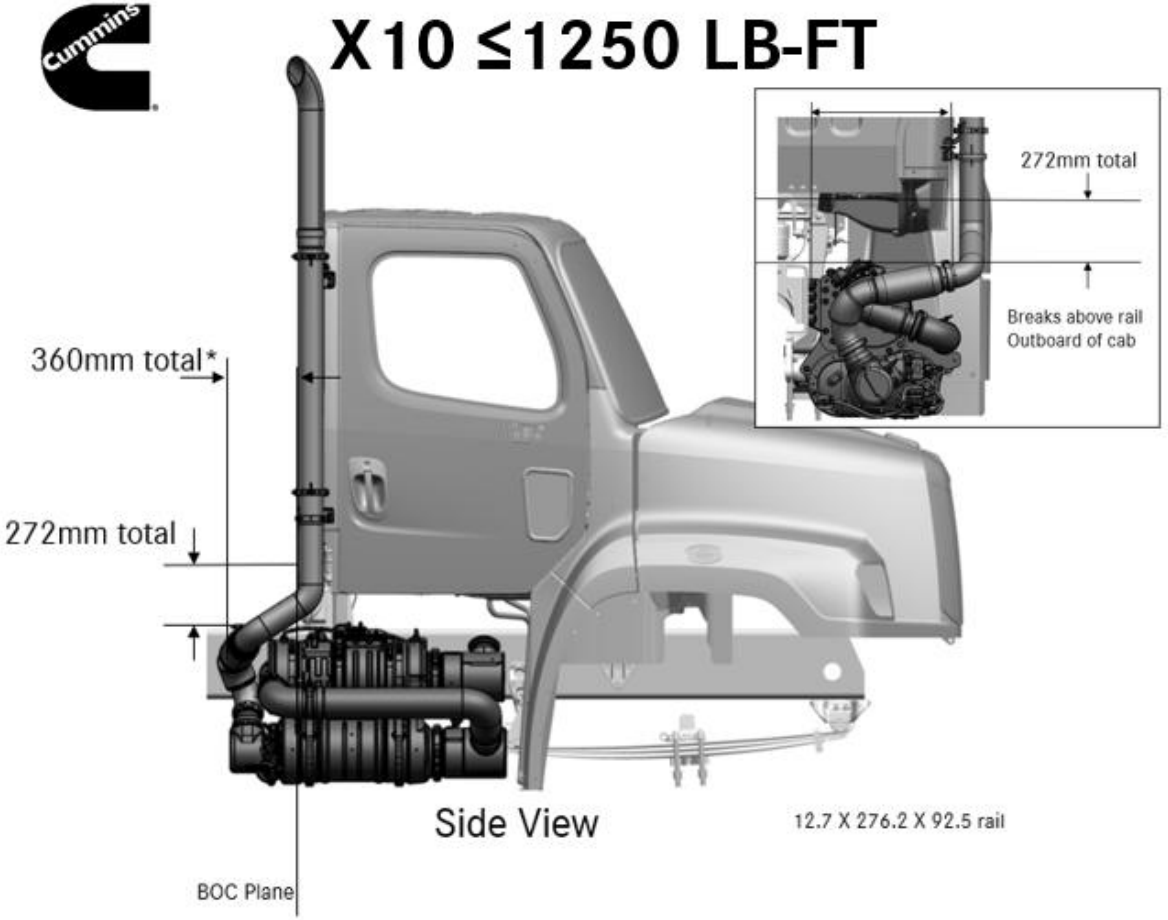

2027 SFA
X10 ≤1250 LB-FT

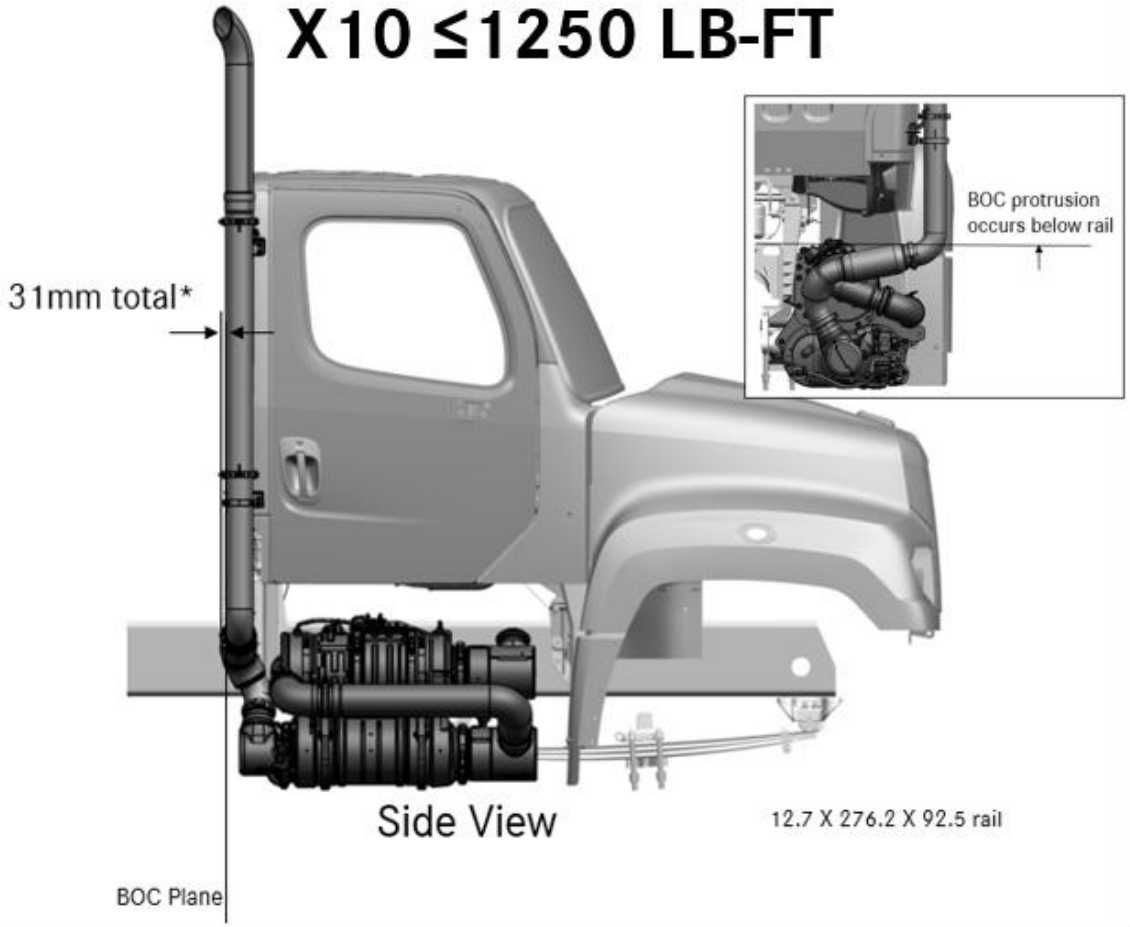

Freightliner 114SD Plus Day Cab

2027 SBA
X10 >1250 LB-FT

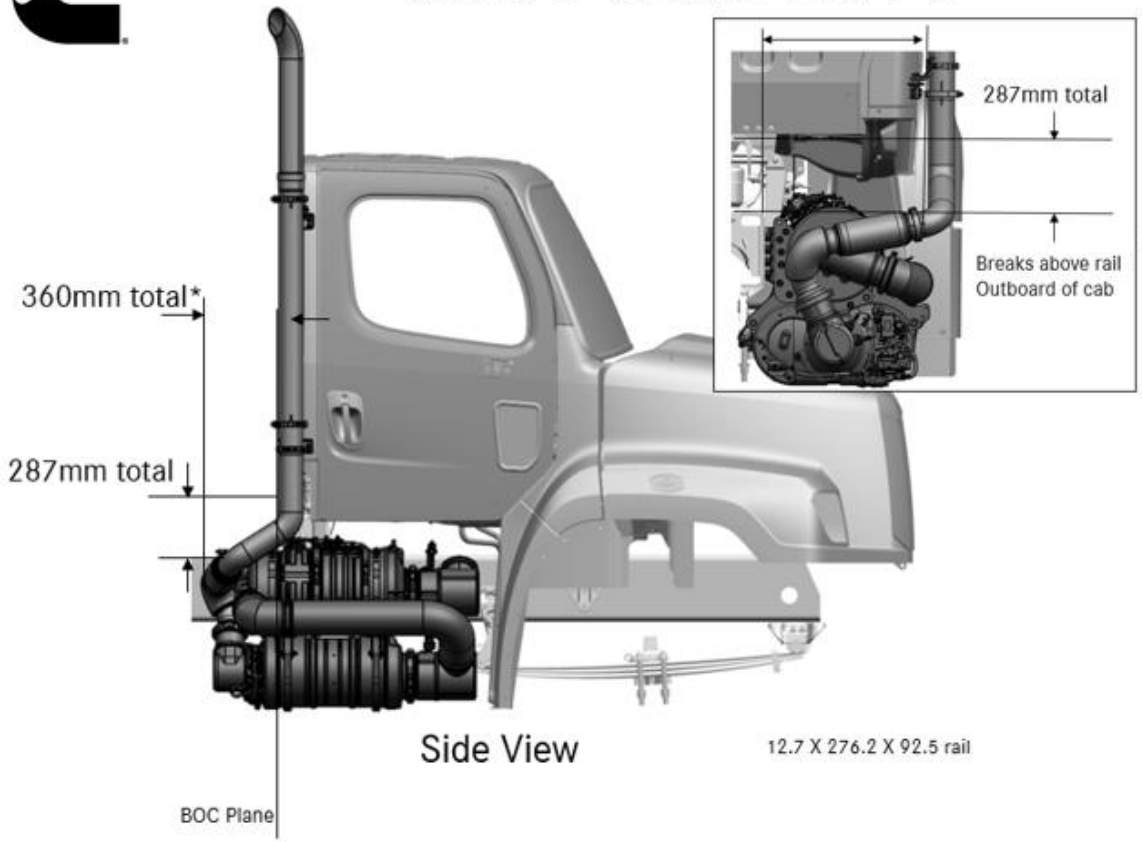

2027 SFA
X10 >1250 LB-FT

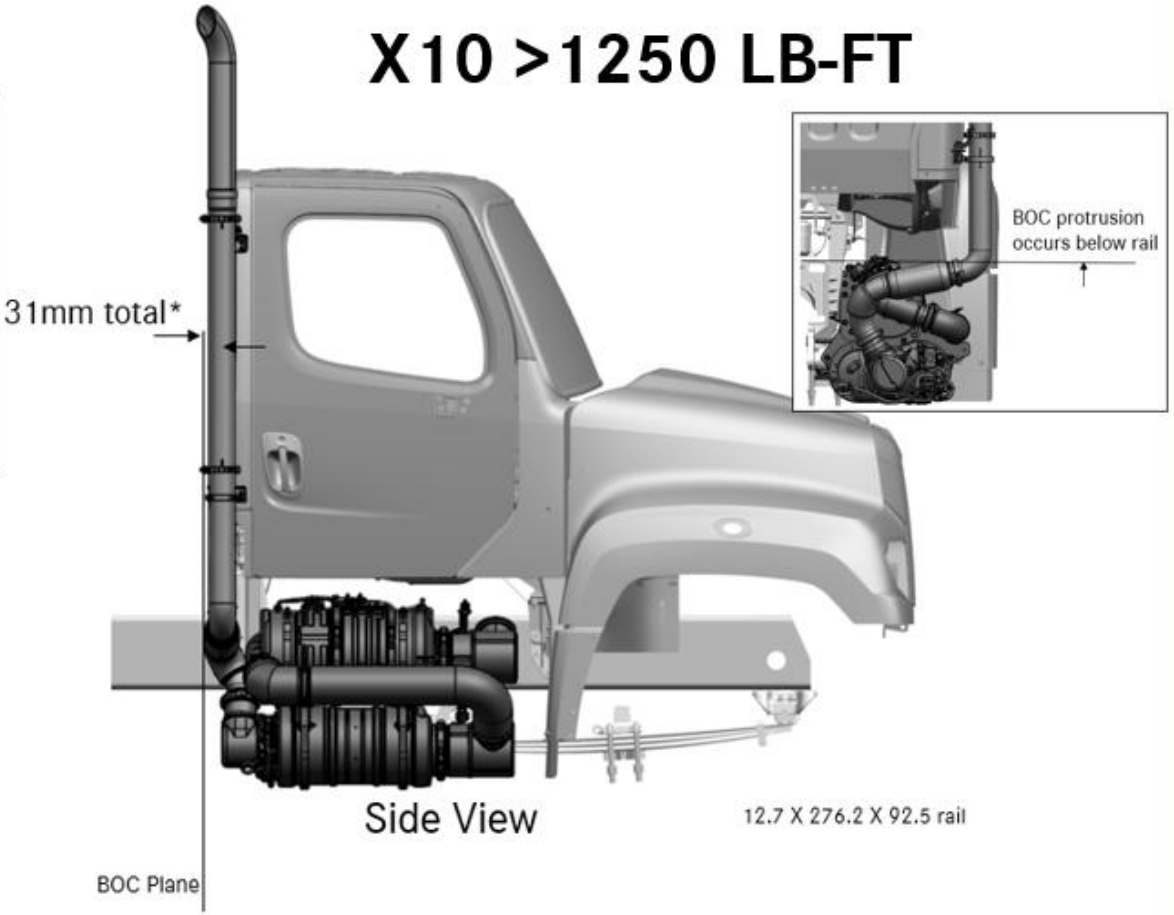

Freightliner 114SD Plus Set Back Day Cab

2027 X10 X10 >1250 LB-FT
Vertical ATS

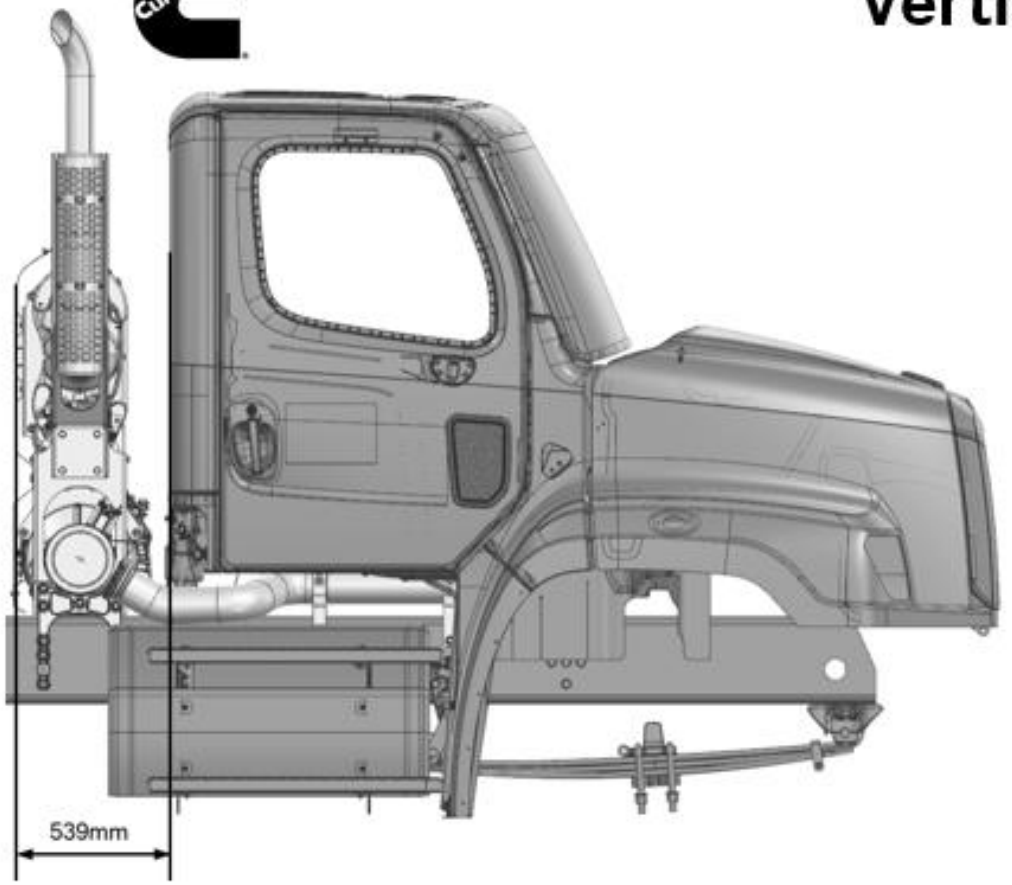

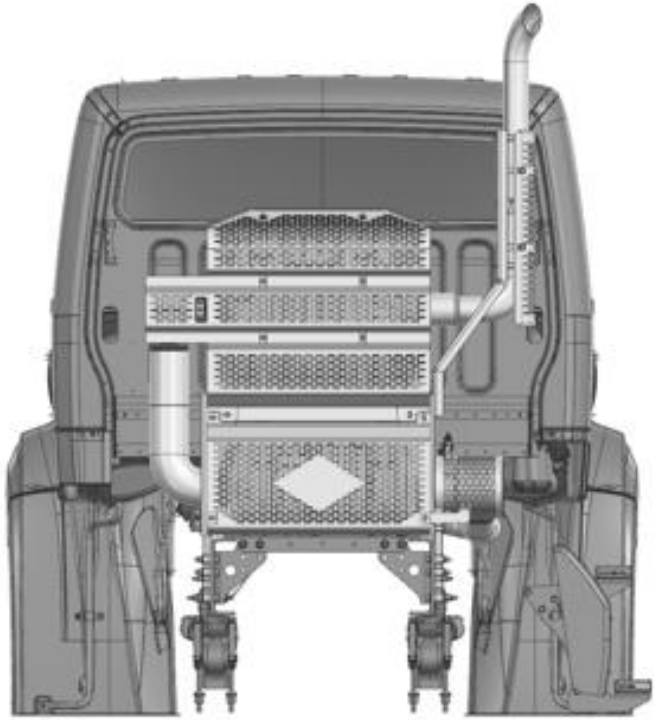



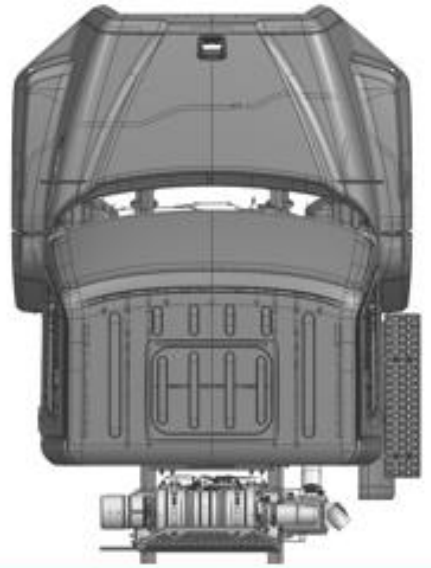

Western Star 47X Day Cab

WESTERN STAR

WESTERN STAR

Cummins

2027 SBA
X10 ≤1250 LB-FT

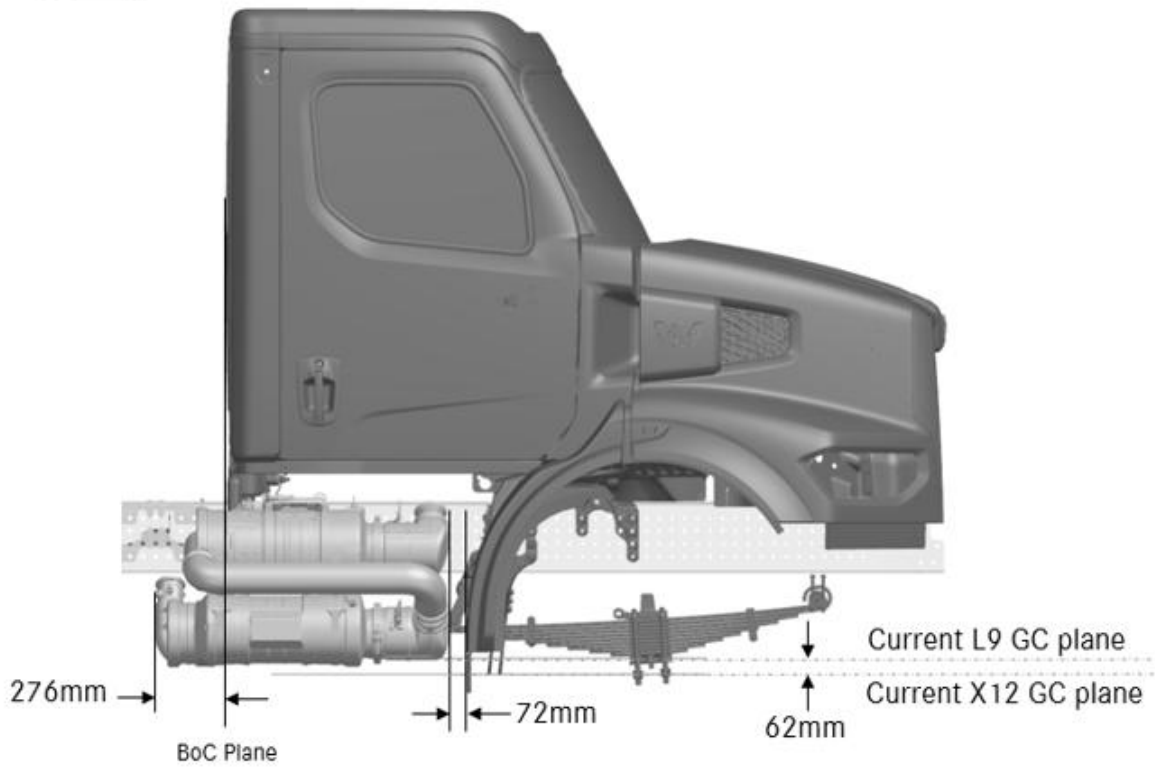

2027 SFA
X10 ≤1250 LB-FT

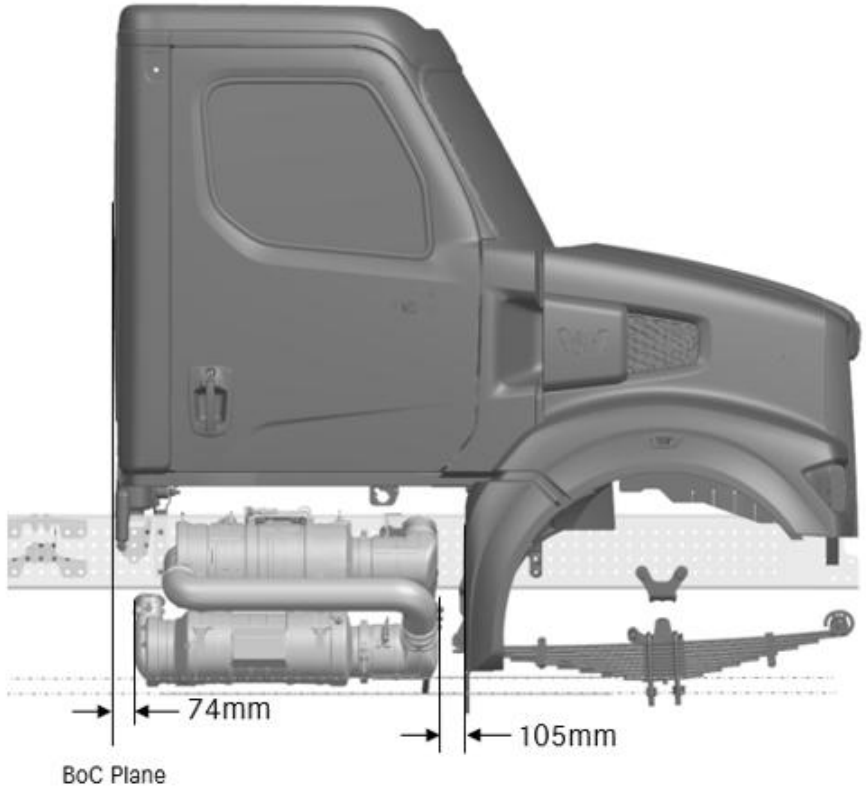

Western Star 47X Day Cab

WESTERN STAR

2027 SBA
X10 >1250 LB-FT

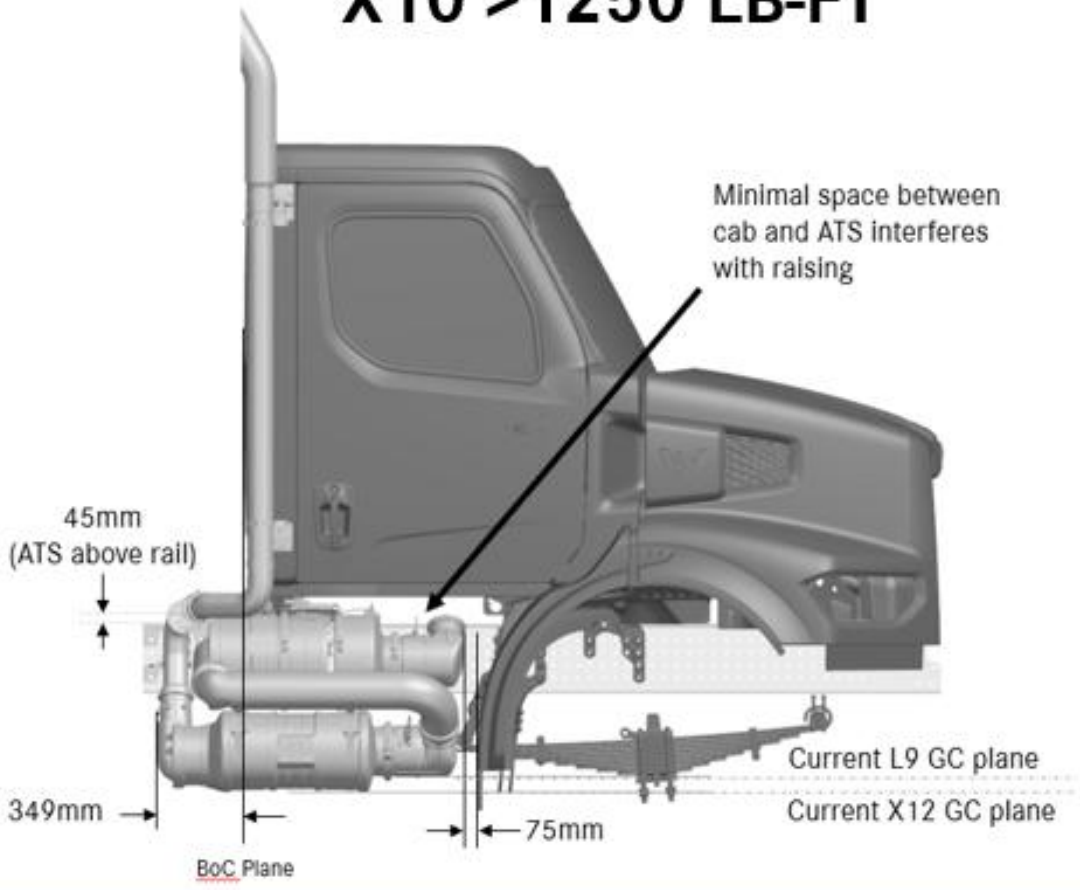

2027 SFA
X10 >1250 LB-FT

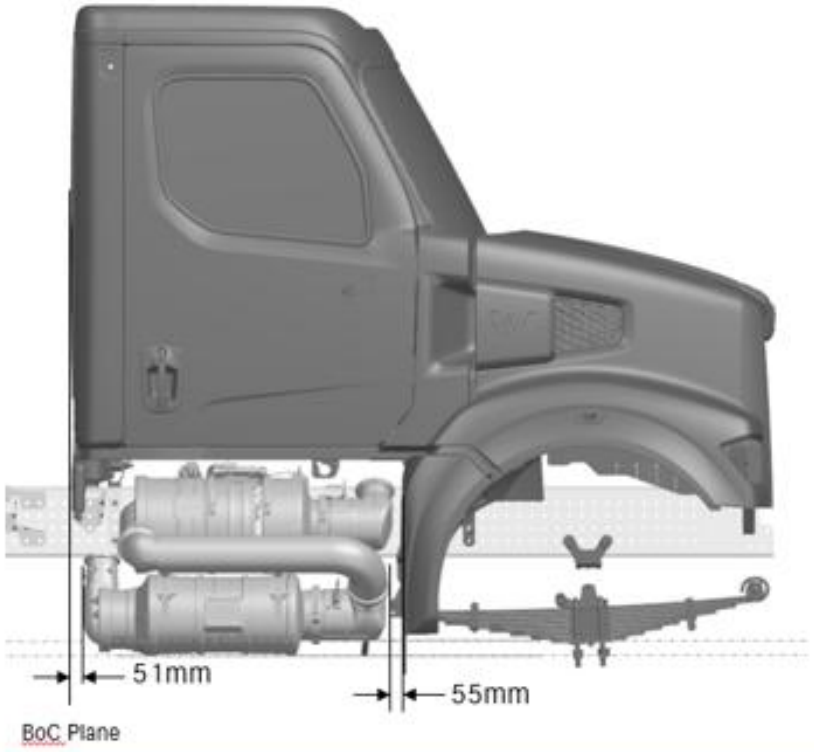

Western Star 47X Set Back Day Cab

WESTERN STAR

WESTERN STAR

Cummins

2027 X10 >1250 LB-FT
Vertical ATS

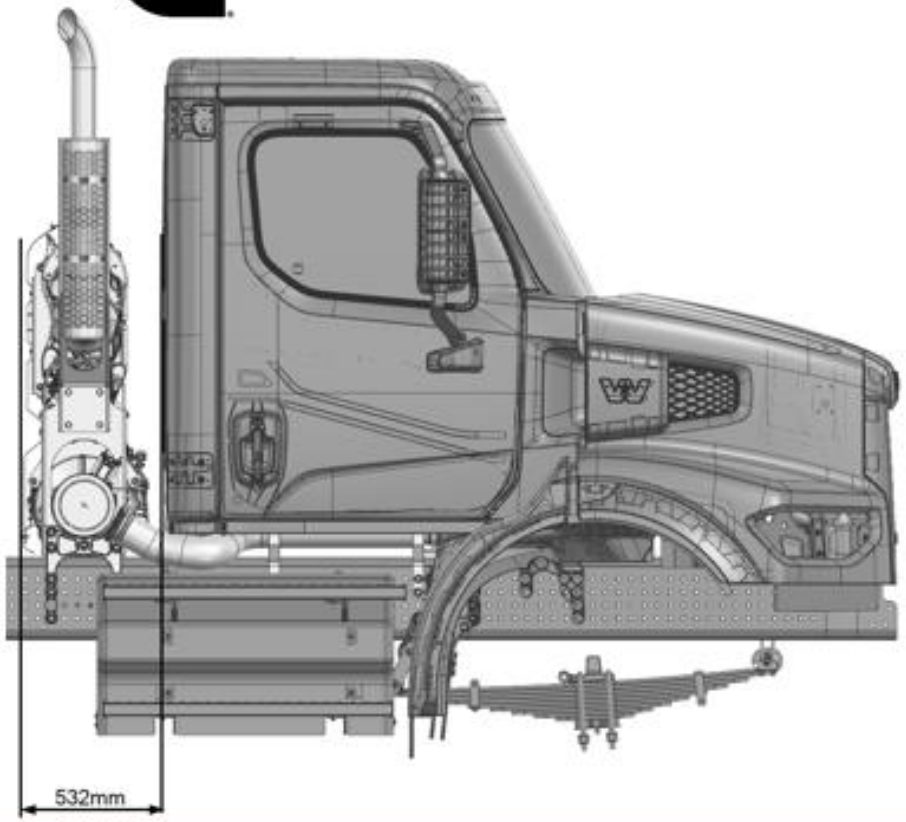

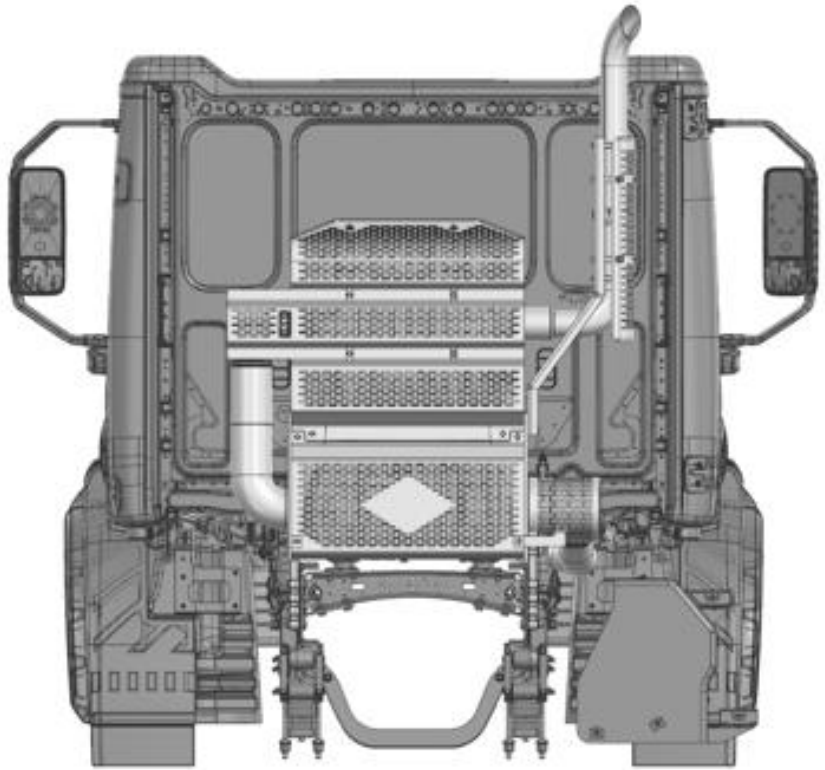

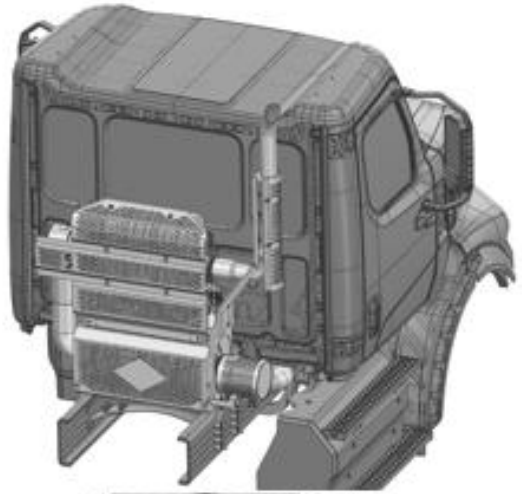

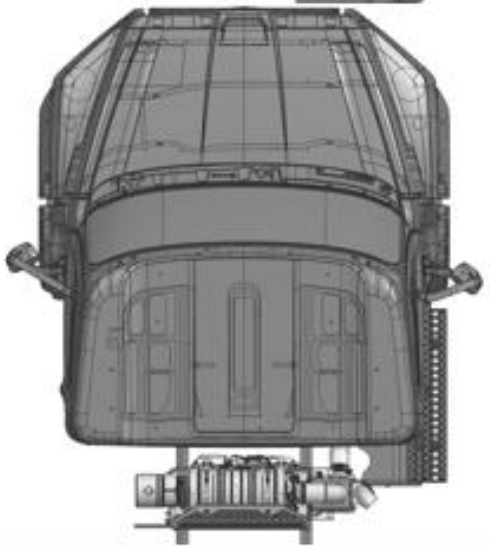

Western Star 49X Day Cab

WESTERN STAR

2027 SBA
X15

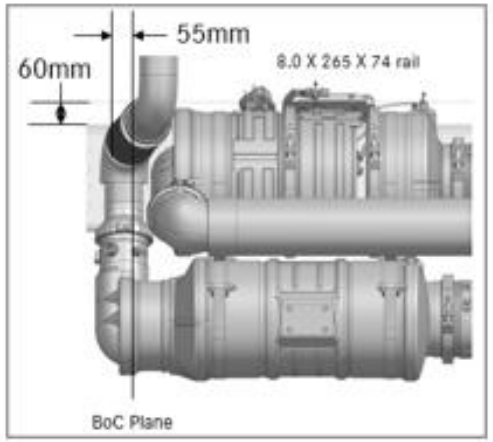

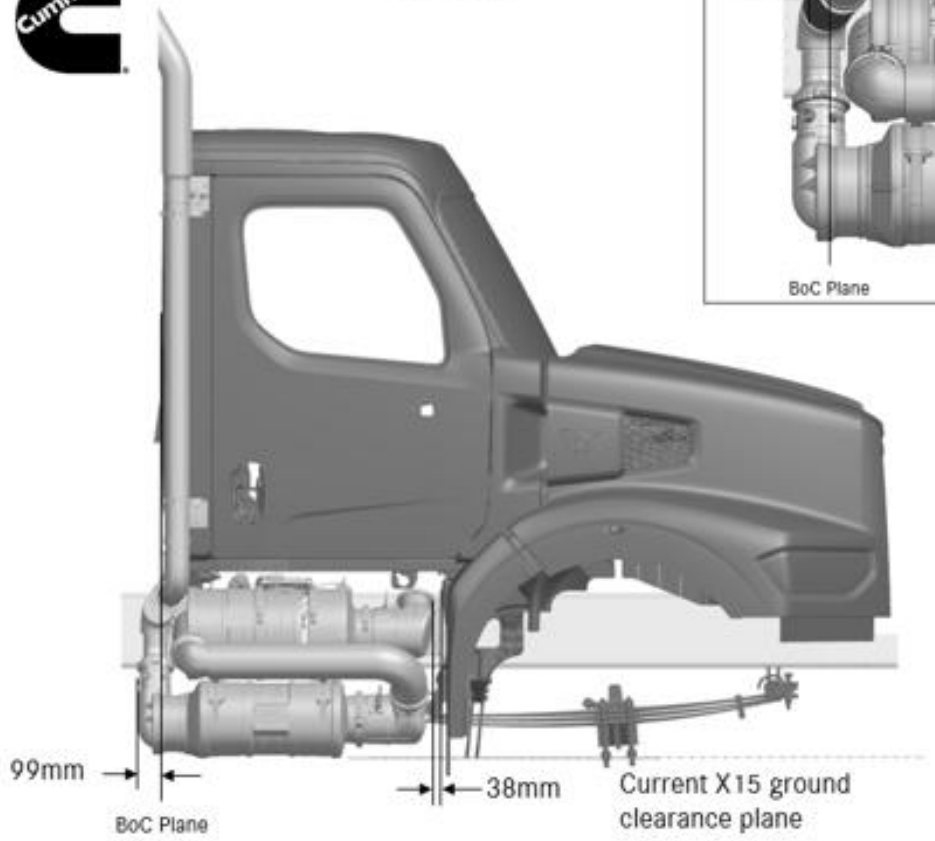

2027 SFA
X15

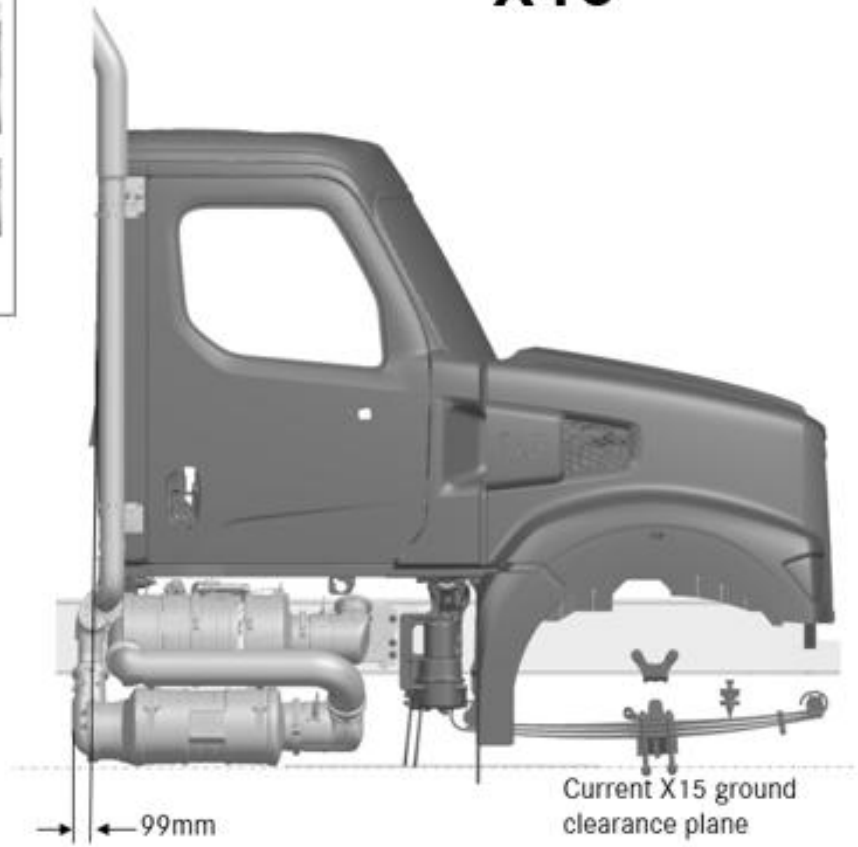

Western Star 49X Day Cab

WESTERN STAR

2027 SBA X15 Understep Dual B Pillar

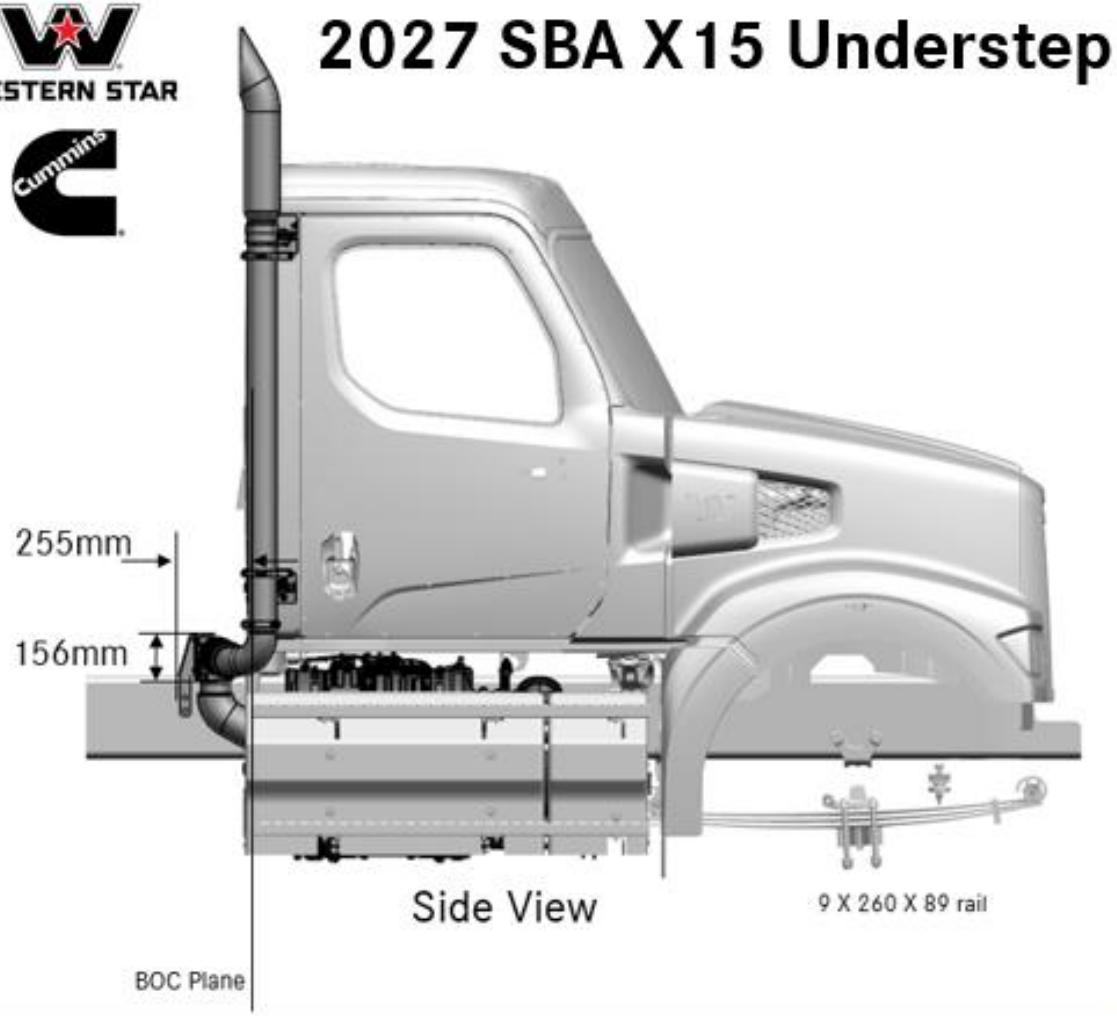

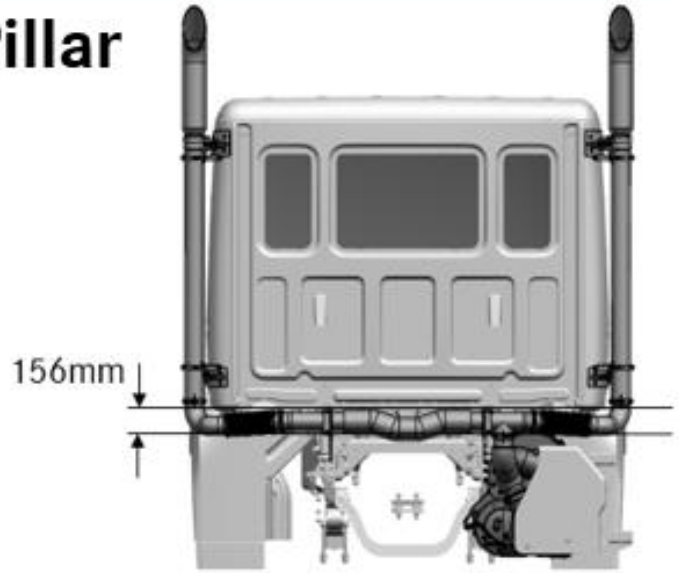



Western Star 49X Day Cab

WESTERN STAR

2027 SBA X15 Vertical ATS

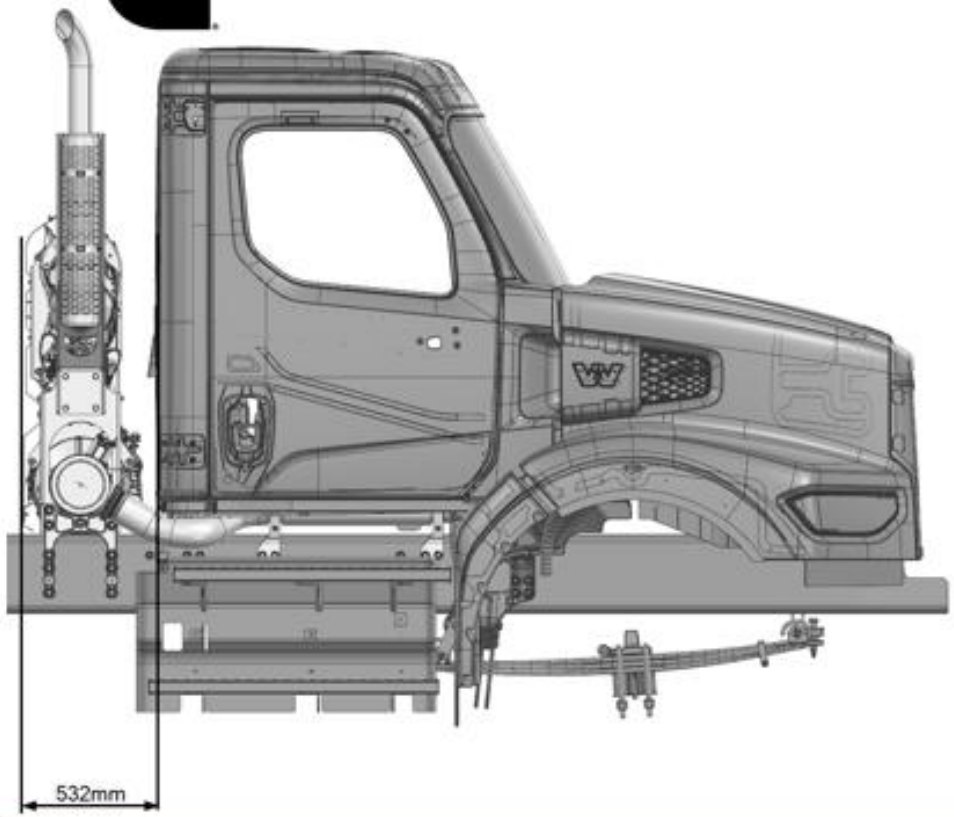

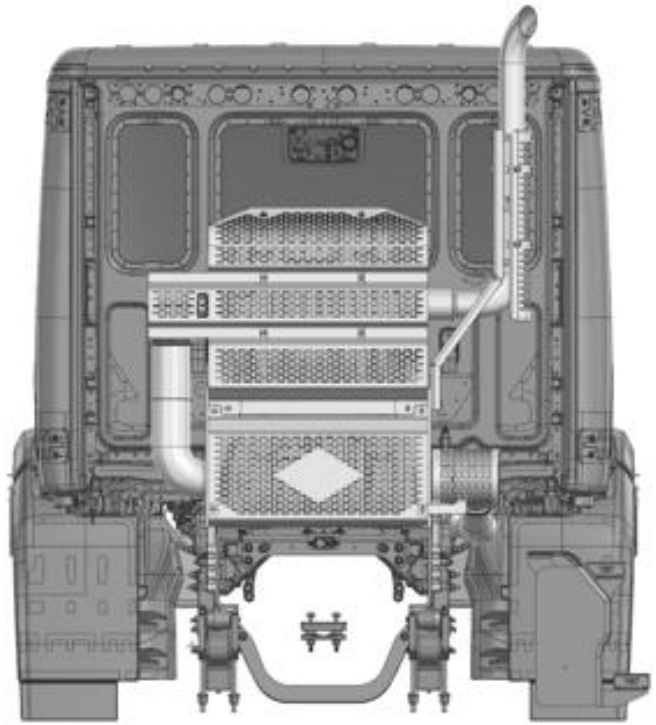





2027 X15 Heater Control Unit (HCU)

What is the HCU?

- 48V heater controller for the Cummins ATS required for the X15 engine to meet emissions targets

Packaging Considerations

- Size and Weight (5.5kg)
- Orientation Requirements
- Thermal Limit (95C operational)

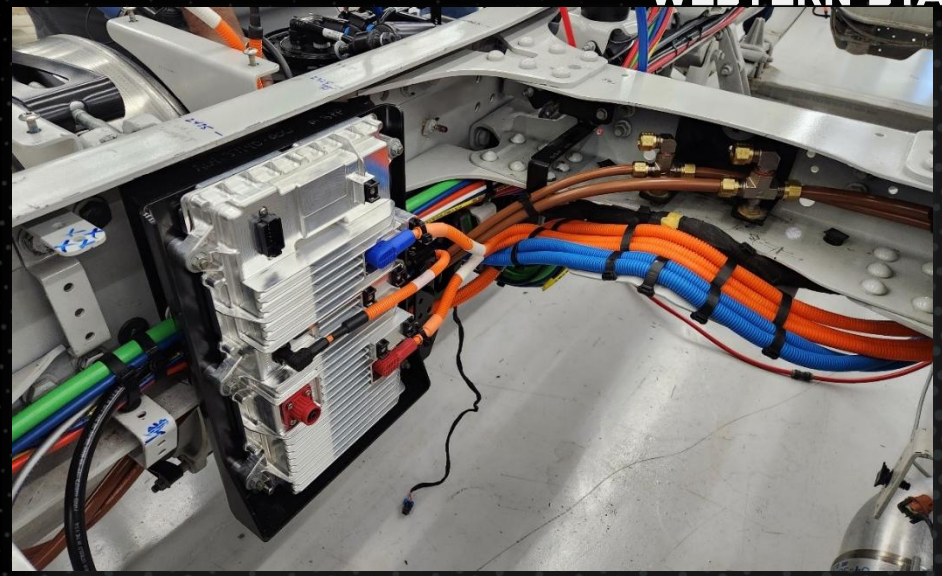

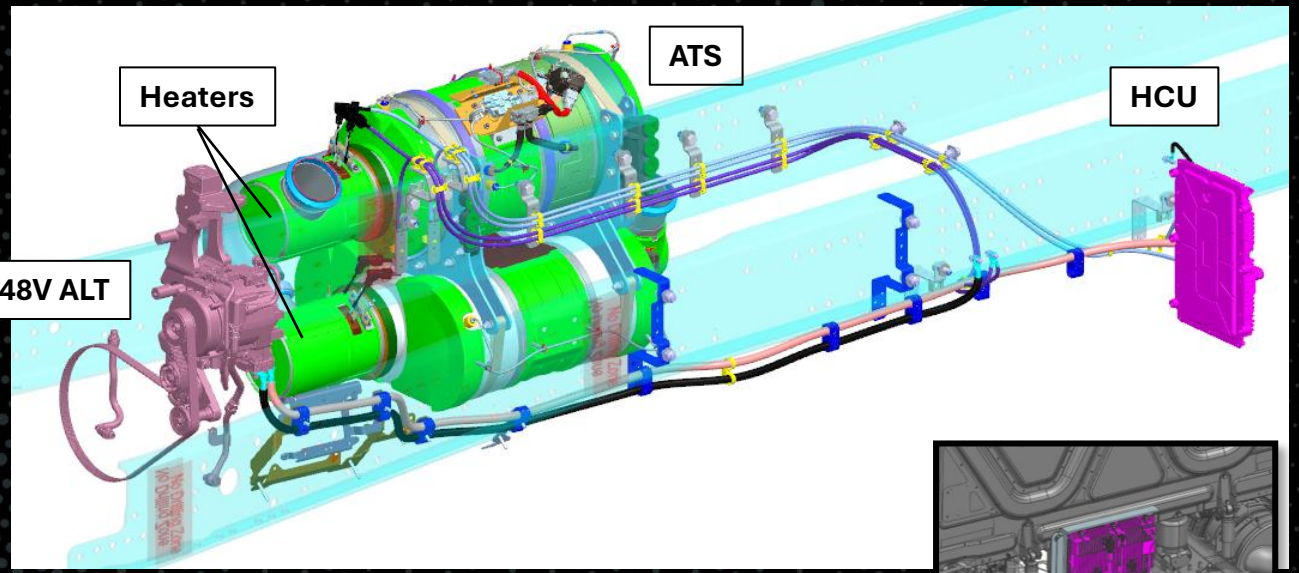

Cascadia Day Cab

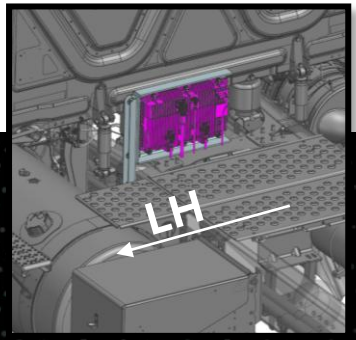

Cascadia Sleeper

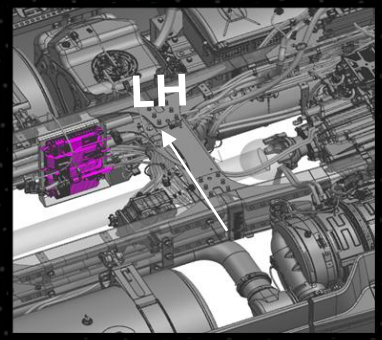

X Series

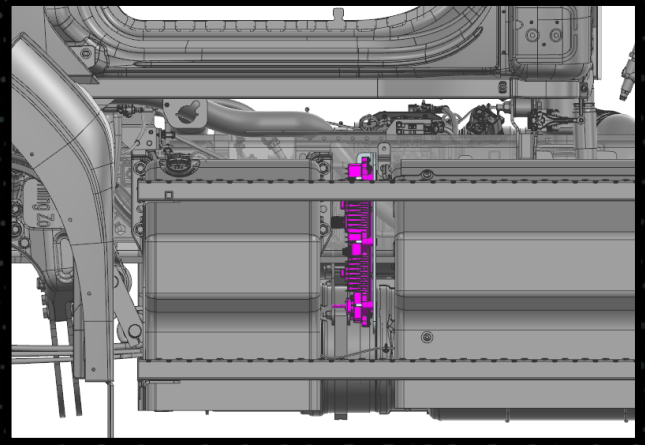

NEW DETROIT ENGINES COMING IN 2027 AND 2028

Meeting Stringent Emissions Compliance with a Familiar Lineup

2027

DETROIT DD15

DETROIT DD13

2028

DETROIT DD16

The next iteration of the DD15 and DD13 will start production in January 2027, the DD16 will get all the same upgrades in 2028*

DETROIT 2027

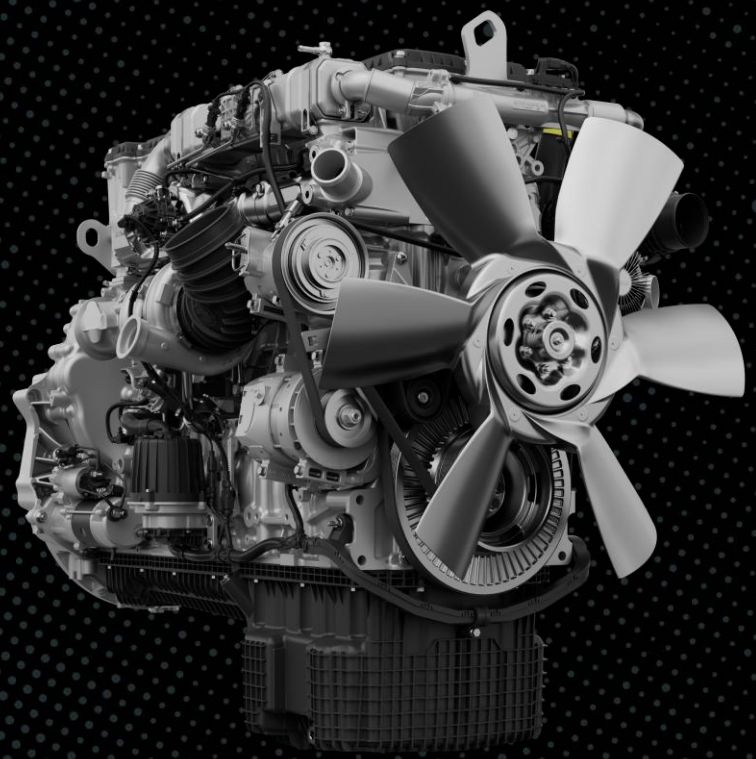



Efficiency

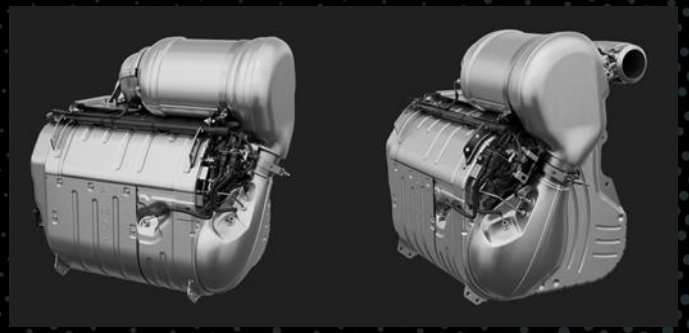

Familiar Technology



Performance



Reliability

DETROIT GEN 6 BENEFITS

EFFICIENCY
- Driving fuel efficiency improvement designed to offset emissions related DEF and idle fuel consumption increases

PERFORMANCE
- Added vocational and downsped highway ratings
- Wastegate turbocharger provides consistent airflow
- Improved engine braking performance

RELIABILITY
- 8 million real-world driving test miles, 3 years extreme conditions testing
- Fuel system designed for higher pressure
- No change in maintenance intervals

INTEGRATION
- Familiar SCR technology
- No back-of-cab ATS impact
- Further downspeeding enabled by higher torque ratings

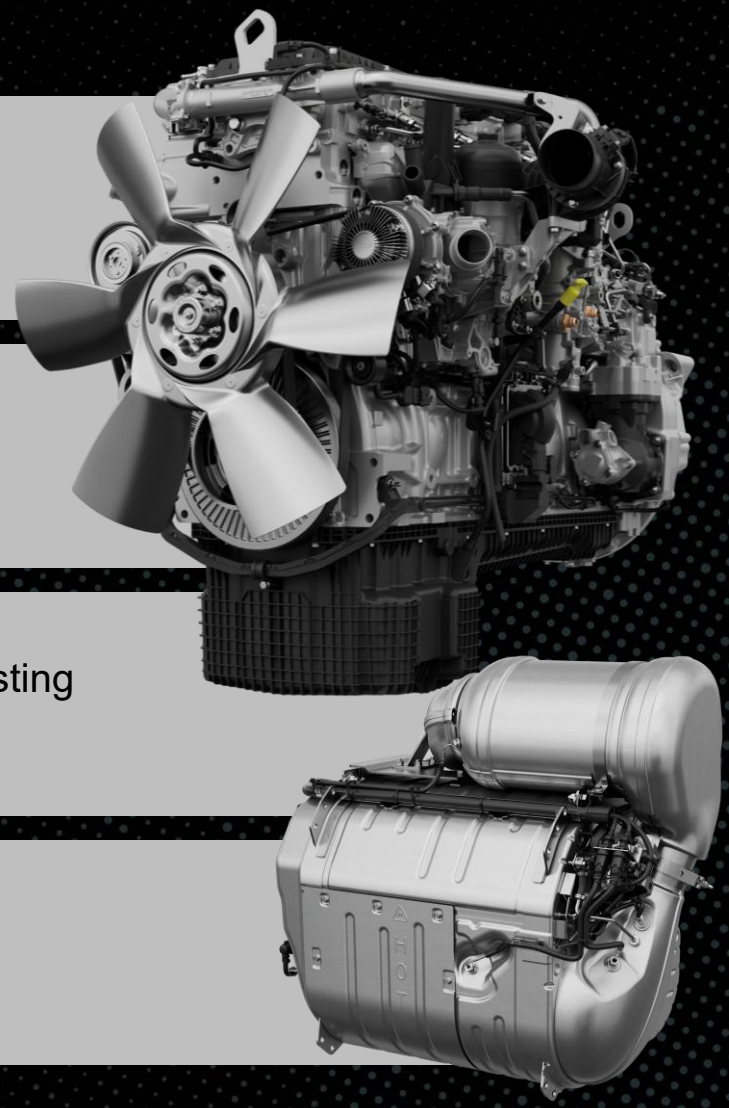

DETROIT GEN 6 NEW FEATURES

FUEL SYSTEM

- Fuel Injector Updates
- Oil-lubricated High Pressure Pump
- Fuel Filter Module
- Priming system

OIL SYSTEM

- Variable Output Oil Pump
- Twin Feed Crankshaft
- Electric Crankcase Breather

TURBOCHARGER

- Wastegate
- Thermal Control Valve

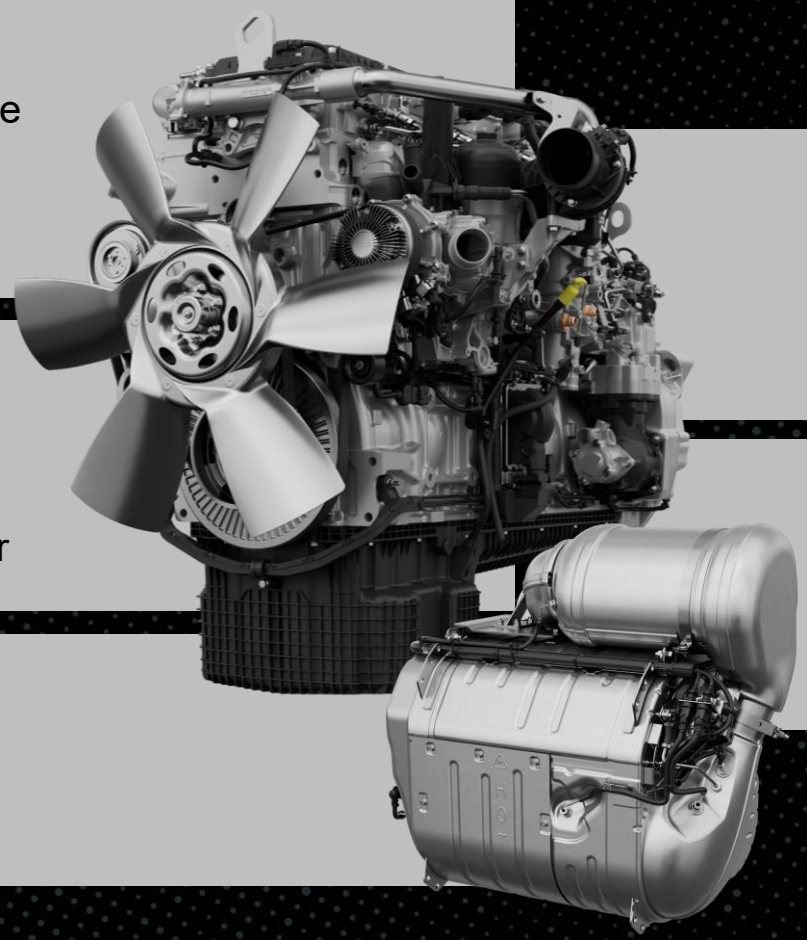

COMBUSTION

- Miller Camshaft Timing
- Optimized Intake Airflow
- High Compression Pistons

AFTERTREATMENT

- Pre-SCR technology
- No change in back-of-cab impact

RELIABILITY: THOROUGH TESTING

Detroit Gen 6 - Validation Overview and Highlights



DETROIT®

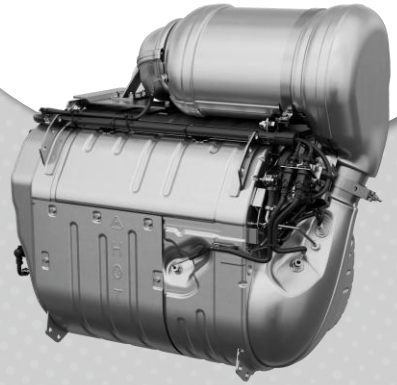

Robust Performance & Durability Testing
- Includes 5 cycles, over 60,000 hours on Durability test stands

3 Years Extreme Ambient & Altitude Testing
- Vehicles perform seasonal Winter (down to -40F) & Summer Testing (above 120F)



Over 8 Million Real-World Miles Before Launching
- Reliability & growth test fleet in varied terrain and climates



Extended System Reliability Testing
- New cross-country validation w/ team drivers to reflect real-world use cases

transcending COMPLIANCE

Testing Beyond the Requirements
- Extended mileage accumulation (650k miles)

Extended Idle Testing
- Development through multiple applications w/ extended idle and transmission PTO usage

PERFORMANCE - GEN 6 DETROIT RATINGS

DETROIT DD13

Horsepower		Torque	
Rating	RPM	Rating	RPM
410	1625	1450	900
410	1625	1650	900
425	1500	1750	900
450	1625	1550	900
450	1625	1650	900
450	1500	1750	900
450	**1500**	**1850**	**900**
470	1625	1650	900
500	**1625**	**1750**	**900**
500	1625	1850	900
525	1625	1850	900

DETROIT DD15

Horsepower		Torque	
Rating	RPM	Rating	RPM
425	1500	1750	900
425	**1500**	**1900**	**900**
455	1500	1650	900
455	1500	1750	900
455	**1500**	**1900**	**900**
485	1625	1650	900
505	1625	1650	900
505	1625	1750	900
505	1625	1850	900

DETROIT DD16

Horsepower		Torque	
Rating	RPM	Rating	RPM
560	1700	1850	900
560	1700	2050	900
600	1700	1850	900
605	1700	2050	900

New Rating
* DD16 Gen 6 Start of Production is 2028

Torque Curve Comparison

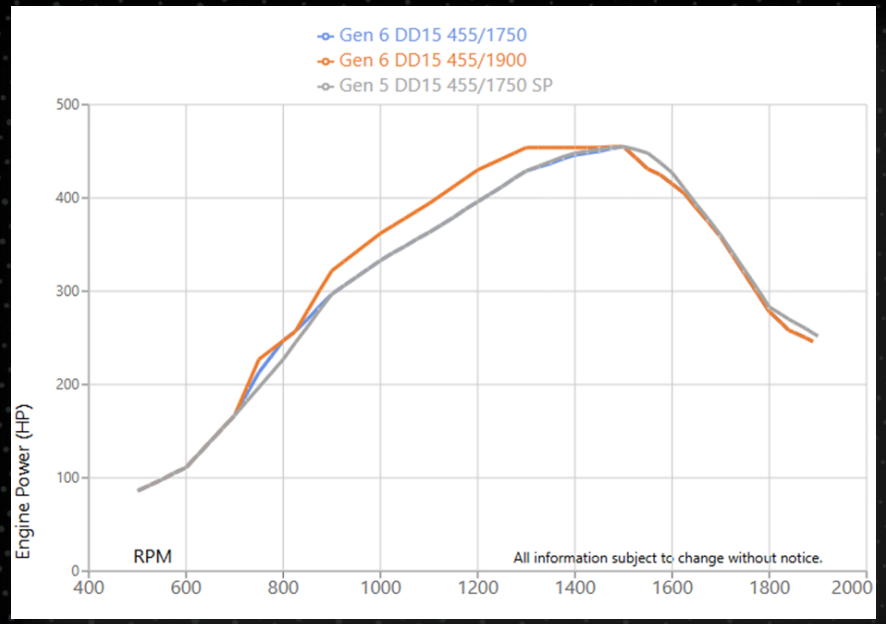

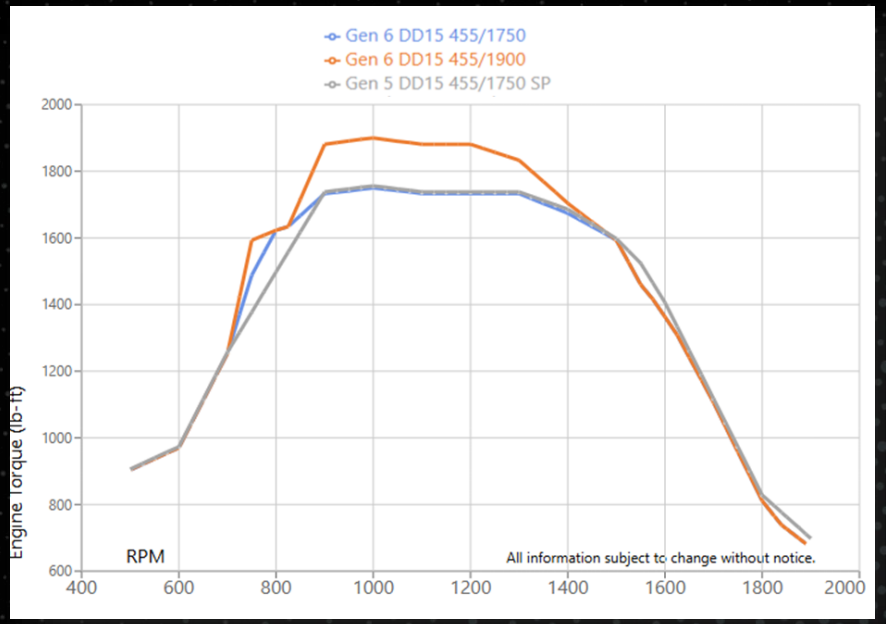

Gen 6 engines improve performance, even within comparable ratings

1. Horsepower develops faster with higher torque ratings
2. Gen 6 ramps up torque faster, even within same ratings

Use Engine Rating Comparison Tool to visualize powertrain performance with your customers

https://enginerating-dtna.prd.freightliner.com/

2027 Gen 6 Aftertreatment Packaging



We kept the changes out of your way.

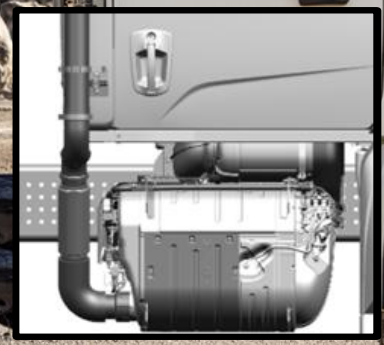

CHEC Updates



WHY IT MATTERS

Every truck, ready to roll.

Today, switch programming happens after the truck leaves the plant. Units can't drop ship to the customer — they route through a dealer or upfitter shop, where each truck is programmed one at a time, on your dime.

No
drop ship — trucks reroute through a shop

1x1
every truck programmed individually

$$$
added shop labor, freight and delay

Pre-CHEC removes the shop step

Factory ready, direct to customer



Switches programmed after delivery, one truck at a time

DAIMLER TRUCK NORTH AMERICA

AVAILABLE Q1 2027

Programmed at the factory.

Pre-CHEC ships with up to 30 switches and their outputs already programmed from the factory — no aftermarket programming, no upfitter wiring, no delay. The truck arrives ready to work.

30
switches configured before delivery

100%
outputs programmed at the factory

0
aftermarket programming required

Spec data code 48F-014

Orders open Q1 2027



Western Star X-Series dash — factory switch bank

DAIMLER TRUCK NORTH AMERICA

Pre-CHEC vs. Hardwired Switches

Built to adapt — reconfigure as your fleet's needs evolve, with no truck rewiring required.

Both options are fully functional from the factory

30 switches
vs. 4 hardwired — up to 7.5× more capacity per truck

CHEC custom logic
Add and reprogram switch behavior in software

0 rewires
Aftermarket changes without touching truck wiring

CATEGORY	HARDWIRED	Pre-CHEC
How to select Data codes	329, 4C0, 4C1, 4C2, 4C3, 4C4	**48F-014** *The new data code that powers Pre-CHEC* 4CG, 4CH
Switch types Latching & momentary	2-pos latching / momentary, 3-pos latching / momentary	2-pos latching / momentary, 3-pos latching / momentary
Number of switches Per truck	Maximum of 4	**Maximum of 30**
Output types Current ratings	10A, 20A, 30A	2A, 5A, 20A, Air
Interface points Connection locations	None, between the seats, back of cab, end of frame	Between the seats, back of cab
Interface types Termination	Capped, blunt cuts	Capped, blunt cuts
Aftermarket modifications Changing the setup later	Requires wiring changes to the truck	**No wiring changes —** **Custom logic added via CHEC**

Check out our vehicle display



What's New at Upfitter Summit 2026

Western Star 49X Quad-Axle Dump



Power Hood, DD16 Engine, dump integrated with QuickFit

Freightliner 114SD Grapple Saw



Come see the "after" product shown at NTEA Work Truck Week in March

Exterior Camera System



- Freightliner Plus series and Western Star X-Series offer a multi-camera system, for factory installation or pre-wire implementation
- System can utilize up to four cameras with Interactive Touchscreen Display
- Backup camera now standard



Factory installed side-mounted camera on X-Series



Forward factory installed camera on Plus series

QuickFit Component Tutorial

FREIGHTLINER

WESTERN STAR

QuickFit enables TEM customization and automation for improved operator experience on the road. Come see the parts and learn more about the system.

- Quickly customize and automate body functionality with the CHEC tool
- Eliminate the need for drilling and cutting into the cab or body panels during upfit, allowing you to install equipment more quickly and efficiently.









DTNA Upfit Experience

When?
October 14th – 12:30 pm – 3:00 pm

Where is it?
Aloeswood Conference Room

What's Here?
Drop in and connect with DTNA experts from CHEC, Product & Powertrain Marketing, and Upfit Strategy to discuss Freightliner and Western Star upfits. Ask questions, share feedback, and explore solutions with the team.

We're here for your feedback: share your insights through our research survey and enter for a chance to win a custom Leatherman® multi-tool.

QUICKFIT POWERED BY chec



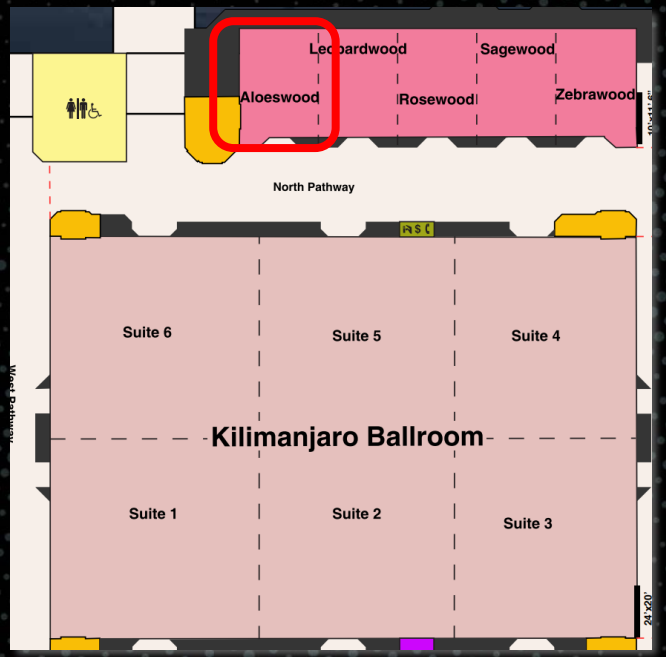



Questions?



Thank You!

