WEIGHT DISTRIBUTION INPUT FORM

Name: _____ Date: _____
Company: _____
Phone: _____
Fax: _____

ITEMS NEEDED TO CALCULATE:

WEIGHT DISTRIBUTION – A, D, G, H, L, M & P with any additional equipment.

WEIGHT DISTRIBUTION WITH ADDITIONAL AXLES OR A CHANGE IN WHEELBASE – A through P with any additional equipment.

NTEA THE ASSOCIATION FOR THE WORK TRUCK INDUSTRY

CHASSIS DIMENSIONS:

MAKE: _____ **MODEL:** _____ **YEAR:** _____

A Wheelbase _____ INCHES Cab-to-Axle/Tandem _____ INCHES

B New Wheelbase if Rear Axle(s) is moved _____ INCHES

C Number of Rear Axles (before adding a pusher or tag) _____

D Cab-to-Body _____ INCHES Body Length _____ INCHES

E Front Axle to Pusher Axle _____ INCHES

F Front Axle to Tag Axle _____ INCHES Desired Payload _____ POUNDS

COMPONENT WEIGHTS:

G Chassis Weight
(FRONT) _____ POUNDS
(REAR) _____ POUNDS

H Body Weight _____ POUNDS

I Weight of Rear Axle(s) _____ POUNDS

J Weight of Pusher Axle _____ POUNDS

K Weight of Tag Axle _____ POUNDS

Gross Axle Weight Rating (GAWR)

L Front Axle _____ POUNDS

M Rear Axle(s) _____ POUNDS

N Pusher Axle _____ POUNDS

O Tag Axle _____ POUNDS

P Gross Vehicle Weight Rating (GVWR) _____ POUNDS

ADDITIONAL EQUIPMENT:

	Dimension from the Front Axle	Weight
_____	_____ INCHES	_____ POUNDS
_____	_____ INCHES	_____ POUNDS
_____	_____ INCHES	_____ POUNDS
_____	_____ INCHES	_____ POUNDS
_____	_____ INCHES	_____ POUNDS
_____	_____ INCHES	_____ POUNDS

37400 Hills Tech Drive, Farmington Hills, MI 48331-3414 · 1-800-441-NTEA · (248)489-7090 · FAX (248)489-9766
info@ntea.com · www.ntea.com

DEFINITIONS

AUXILIARY EQUIPMENT (Dimension from the Front Axle) — The distance from the centerline of the front axle to the horizontal center of gravity of any auxiliary equipment.

BL (Body Length) — The distance from the foremost point of the body to the rearmost point of the body.

CA (Cab to Axle) — The distance from the back of the truck cab to the center of the rear axle. Clear or EFFECTIVE CA is the distance from the rear surface of any obstruction behind the cab to the center of the rear axle. On a tandem axle truck this dimension, often called CT (cab to Tandem), is from the back of the cab to a point midway between the two rear axles.

CB (Cab to Body) — The distance between truck cab and body.

CHASSIS WEIGHT (Front & Rear) — The distribution of bare chassis weight, including all options, fuel, lubricants and coolant, on the front and rear axle/s.

DESIRED LOADED WEIGHT (Front, Rear, Pusher, Tag) — The total weight of chassis, body, equipment and payload that you wish to carry on each axle or group of axles not to exceed federal, state and local weight regulations, the vehicle's gross axle weight ratings and gross vehicle weight ratings.

GROSS AXLE WEIGHT RATING (GAWR) — The value specified by the vehicle manufacturer as the load carrying capacity of a single-axle system, as measured at the tire-ground interfaces.

GROSS VEHICLE WEIGHT RATING (GVWR) — The maximum total vehicle weight, measured at the tire-ground interfaces, for which the vehicle components are designed by the chassis manufacturer to carry. It cannot exceed the sum of all GAWRs.

PUSHER AXLE — An auxiliary axle positioned ahead of the chassis drive axle(s) thus shortening the length of the wheelbase.

TAG AXLE — An auxiliary axle positioned behind the chassis drive axle(s) thus lengthening the wheelbase.

WB (Wheelbase) — Horizontal dimension from the centerline of the front axle to the centerline of the rear axle on a single-rear-axle truck chassis; measured from the center line of the front axle to the center line mid-way between the axles on a tandem-rear-axle truck chassis.

WEIGHT OF REAR, PUSHER AND TAG AXLE(S) — The individual weight of each complete axle assembly including suspension, subframe, wheels, and tires.

NOTE: Measurements and weights must be consistent with regard to units of measure such as pounds and inches or millimeters and kilograms.

CHASSIS DIMENSIONS:

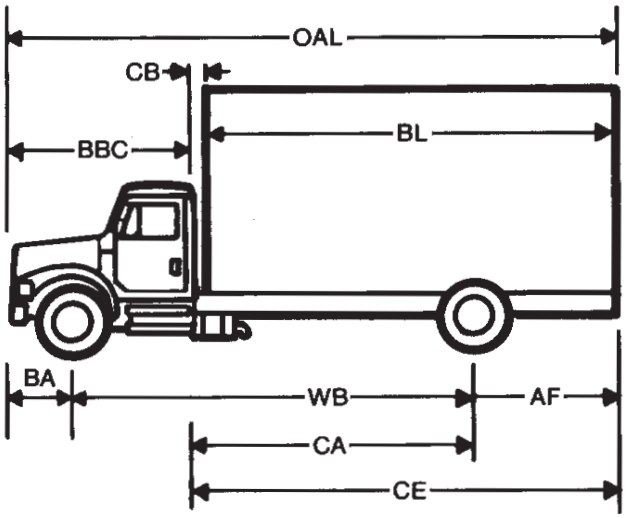

AF — Axle to End of Frame
BA — Bumper to Axle
BBC — Bumper to Back of Cab
BL — Body Length
CA — Cab to Axle
CB — Cab to Body
CE — Cab to End of Frame
FH — Frame Height
OAL — Overall Length
WB — Wheelbase

37400 Hills Tech Drive, Farmington Hills, MI 48331-3414 · 1-800-441-NTEA · (248)489-7090 · FAX (248)489-9766
info@ntea.com · www.ntea.com